SULLAIR®

INDUSTRIAL ROTARY SCREW AIR COMPRESSOR

LS–25S–257KW

SUPERVISOR II

EQUIPMENT NO.
1–MC–QB001
0–MC–QB001
2–MC–QB001

OPERATOR'S MANUAL AND PARTS LIST

Part Number 02250127–759
©Sullair Corporation

AIR CARE
SEMINAR TRAINING

Sullair Air Care Seminars are 3-day courses that provide hands-on instruction in the proper operation, maintenance and service of Sullair equipment. Individual seminars on Industrial compressors and compressor electrical systems are presented at regular intervals throughout the year at a dedicated training facility at Sullair's corporate headquarters in Michigan City, Indiana.

Instruction includes discussion of the function and installation of Sullair service parts, troubleshooting of the most common problems, and actual equipment operation. The seminars are recommended for maintenance and service personnel.

For detailed course outlines, schedule and cost information contact:

Sullair Corporate Training Department
1-888-SULLAIR or 219-879-5451 (ext. 5363)

- Or Write -

Sullair Corporation
3700 E. Michigan Blvd.
Michigan City, IN 46360
Attn: Service Training Department

TABLE OF CONTENTS

Section 1
SAFETY

PAGE	
1	1.1 GENERAL
1	1.2 PERSONAL PROTECTIVE EQUIPMENT
1	1.3 PRESSURE RELEASE
2	1.4 FIRE AND EXPLOSION
2	1.5 MOVING PARTS
2	1.6 HOT SURFACES, SHARP EDGES AND SHARP CORNERS
2	1.7 TOXIC AND IRRITATING SUBSTANCES
3	1.8 ELECTRICAL SHOCK
3	1.9 LIFTING
4	1.10 ENTRAPMENT

Section 2
DESCRIPTION

5	2.1 INTRODUCTION
5	2.2 DESCRIPTION OF COMPONENTS
6	2.3 SULLAIR COMPRESSOR UNIT, FUNCTIONAL DESCRIPTION
7	2.4 COMPRESSOR COOLING AND LUBRICATION SYSTEM, FUNCTIONAL DESCRIPTION
7	2.5 COMPRESSOR DISCHARGE SYSTEM, FUNCTIONAL DESCRIPTION
8	2.6 CONTROL SYSTEM, FUNCTIONAL DESCRIPTION
11	2.7 AIR INLET SYSTEM, FUNCTIONAL DESCRIPTION
11	2.8 SUPERVISOR II PANEL BASIC INSTRUCTION
11	2.9 KEYPAD
13	2.10 STATUS DISPLAYS
14	2.11 LAMP INDICATORS

Section 3
SPECIFICATIONS

15	3.1A IDENTIFICATION – LS25S
16	3.1B LS25S COOLER PACK
17	3.2 LUBRICATION GUIDE–STANDARD COMPRESSORS
17	3.3 APPLICATION GUIDE

Section 4
INSTALLATION

19	4.1 MOUNTING OF COMPRESSOR
19	4.2 VENTILATION AND COOLING
19	4.3 SERVICE AIR PIPING
19	4.4 FLUID PIPING (AIR–COOLED ONLY)
20	4.5 COUPLING ALIGNMENT CHECK
20	4.6 FLUID LEVEL CHECK

TABLE OF CONTENTS
(CONTINUED)

Section 4
INSTALLATION (CONT)

PAGE	
20	4.7 ELECTRICAL PREPARATION
21	4.8 MOTOR ROTATION CHECK

Section 5
OPERATION

23	5.1 GENERAL
23	5.2 PURPOSE OF CONTROLS
24	5.3 PARAMETER SETUP
25	5.4 OPERATING THE COMPRESSOR
26	5.5 SUPERVISOR OUTPUT RELAYS
27	5.6 INITIAL START–UP PROCEDURE
27	5.7 SUBSEQUENT START–UP PROCEDURE
27	5.8 SHUTDOWN PROCEDURE

Section 6
MAINTENANCE

29	6.1 MAINTENANCE INTRODUCTION
29	6.2 DAILY OPERATION
29	6.3 MAINTENANCE AFTER INITIAL 50 HOURS OF OPERATION
29	6.4 MAINTENANCE EVER 1000 HOURS
29	6.5 FLUID CHANGE
29	6.6 SEPARATOR MAINTENANCE
29	6.7 PARTS REPLACEMENT AND ADJUSTMENT PROCEDURES
29	MAIN FILTER MAINTENANCE
30	AIR FILTER MAINTENANCE
31	SEPARATOR ELEMENTS REPLACEMENT
32	DIFFERENTIAL PRESSURE REGULATOR ADJUSTMENT
32	PRESSURE REGULATOR MAINTENANCE
32	DRIVE COUPLING INSTALLATION AND ALIGNMENT
35	6.8 TROUBLESHOOTING INTRODUCTION
35	6.9 TROUBLESHOOTING GUIDE

Section 7
ILLUSTRATIONS AND PARTS LIST

37	7.1 PROCEDURE FOR ORDERING PARTS
37	7.2 RECOMMENDED SPARE PARTS LIST
38	7.3 MOTOR, COMPRESSOR, FRAME AND PARTS

TABLE OF CONTENTS
(CONTINUED)

Section 7
ILLUSTRATIONS AND PARTS LIST (CONT)

PAGE	
40	7.4 COMPRESSOR AIR INTAKE SYSTEM
42	7.5 FLUID COOLING PIPING SYSTEM – AIR–COOLED REMOTE COOLER
44	7.6 FLUID COOLING SYSTEM – AIR–COOLED REMOTE COOLER
46	7.7 FLUID COOLING SYSTEM – AIR–COOLED REMOTE (LOW NOISE)
48	7.8 COMPRESSOR DISCHARGE SYSTEM
52	7.9 SULLICON CONTROL
54	7.10 COMPRESSOR ACTUATOR
56	7.11 ELECTRO–PNEUMATIC CONTROL SYSTEM
60	7.12 ENCLOSURE
64	7.13 UNIT TUBING
66	7.14 DECAL GROUP
72	7.15 DECAL LOCATIONS
74	7.16 PIPING AND INSTRUMENTATION
76	7.17 WIRING DIAGRAM

1.1 GENERAL

Sullair Corporation and its subsidiaries design and manufacture all of their products so they can be operated safely. However, the responsibility for safe operation rests with those who use and maintain these products. The following safety precautions are offered as a guide which, if conscientiously followed, will minimize the possibility of accidents throughout the useful life of this equipment.

The compressor should be operated only by those who have been trained and delegated to do so, and who have read and understood this Operator's Manual. Failure to follow the instructions, procedures and safety precautions in this manual can result in accidents and injuries. Read this manual prior to startup.

NEVER start the compressor unless it is safe to do so. **DO NOT** attempt to operate the compressor with a known unsafe condition. Tag the compressor and render it inoperative by disconnecting and locking out all power at source or otherwise disabling its prime mover, so others who may not know of the unsafe condition, cannot attempt to operate it until the condition is corrected.

Install, use and operate the compressor only in full compliance with all pertinent regulations and all applicable Federal, State, and Local codes, standards and regulations.

DO NOT modify the compressor and/or controls in any way except with written factory approval.

While not specifically applicable to all types of compressors with all types of prime movers, most of the precautionary statements contained herein are applicable to most compressors and the concepts behind these statements are generally applicable to all compressors.

1.2 PERSONAL PROTECTIVE EQUIPMENT

Prior to installing or operating the compressor, owners, employers and users should become familiar with, and comply with, all applicable regulations and any applicable Federal, State and Local codes, standards, and regulations relative to personal protective equipment, such as eye and face protective equipment, respiratory protective equipment, equipment intended to protect the extremities, protective clothing, protective shields and barriers and electrical protective equipment, as well as noise exposure administrative and/or engineering controls and/or personal hearing protective equipment.

1.3 PRESSURE RELEASE

A. Install an appropriate flow-limiting valve between the service air outlet and the shut-off (throttle) valve, either at the compressor or at any other point along the air line, when an air hose exceeding 1/2" (13mm) inside diameter is to be connected to the shut-off (throttle) valve, to reduce pressure in case of hose failure, per all applicable Federal, State and Local codes, standards and regulations.

B. When the hose is to be used to supply a manifold, install an additional appropriate flow-limiting valve between the manifold and each air hose exceeding 1/2" (13mm) inside diameter that is to be connected to the manifold to reduce pressure in case of hose failure.

C. Provide an appropriate flow-limiting valve at the beginning of each additional 75 feet (23m) of hose in runs of air hose exceeding 1/2" (13mm) inside diameter to reduce pressure in case of hose failure.

D. Flow-limiting valves are listed by pipe size and rated CFM. Select appropriate valves accordingly, in accordance with their manufacturer's recommendations.

E. DO NOT use air tools that are rated below the maximum rating of the compressor. Select air tools, air hoses, pipes, valves, filters, and other fittings accordingly. **DO NOT** exceed manufacturer's rated safe operating pressures for these items.

F. Secure all hose connections by wire, chain or other suitable retaining devices to prevent tools or hose ends from being accidentally disconnected and expelled.

G. Open fluid filler cap only when compressor **is not running and is not pressurized.** Shut down the compressor and bleed the sump (receiver) to zero internal pressure before removing the cap.

H. Vent all internal pressure prior to opening any line, fitting, hose, valve, drain plug, connection or other component, such as filters and line oilers, and before attempting to refill optional air line anti-icer systems with antifreeze compound.

I. Keep personnel out of line with and away from the discharge opening of hoses or tools or other points of compressed air discharge.

J. Use air at pressures less than 30 psig (2.1 bar) for cleaning purposes, and then only with effective chip guarding and personal protective equipment.

K. DO NOT engage in horseplay with air hoses as death or serious injury may result.

L. DO NOT tamper with sump and unit (if provided) relief valves. Check the relief valve as recommended in the Maintenance Section of this manual or at a minimum of at least weekly to make sure it is not blocked, clogged, obstructed or otherwise disabled. **DO NOT** change the factory setting of the relief valve.

M. If the compressor is installed in an enclosed area, it is necessary to vent the relief valve to the outside of the structure or to an area of non-exposure.

1.4 FIRE AND EXPLOSION

WARNING

When installing a Base Load Transfer (BLT) System, remove jumpers between 16-17 & 18-19 (Dual Control Compressors) so the other compressor does not backfeed defeating the shutdown circuitry.

A. Clean up spills of lubricant or other combustible substances immediately, if such spills occur.

B. Shut off the compressor and allow it to cool. Then keep sparks, flames and other sources of ignition away and **DO NOT** permit smoking in the vicinity when checking or adding lubricant or when refilling air line anti-icer systems with antifreeze compound.

C. **DO NOT** permit fluids, including air line anti-icer system antifreeze compound or fluid film to accumulate on, under, or around acoustical material, or on any external surfaces of the air compressor or on internal surfaces of the enclosure. Wipe down using an aqueous industrial cleaner or steam-clean as required. If necessary, remove acoustical material, clean all surfaces and then replace acoustical material. Any acoustical material with a protective covering that has been torn or punctured should be replaced immediately to prevent accumulation of liquids or fluid film within the material**. DO NOT** use flammable solvents for cleaning purposes.

D. Disconnect and lock out all power at source prior to attempting any repairs or cleaning of the compressor or of the inside of the enclosure, if any.

E. Keep electrical wiring, including all terminals and pressure connectors in good condition. Replace any wiring that has cracked, cut abraded or otherwise degraded insulation, or terminals that are worn, discolored or corroded. Keep all terminals and pressure connectors clean and tight.

F. Keep grounded and/or conductive objects such as tools away from exposed live electrical parts such as terminals to avoid arcing which might serve as a source of ignition.

G. Remove any acoustical material or other material that may be damaged by heat or that may support combustion and is in close proximity, prior to attempting weld repairs.

H. Keep suitable fully charged fire extinguisher or extinguishers nearby when servicing and operating the compressor.

I. Keep oily rags, trash, leaves, litter or other combustibles out of and away from the compressor.

J. DO NOT operate the compressor without proper flow of cooling air or water or with inadequate flow of lubricant or with degraded lubricant.

K. DO NOT attempt to operate the compressor in any classification of hazardous environment unless the compressor has been specially designed and manufactured for that duty.

1.5 MOVING PARTS

A. Keep hands, arms and other parts of the body and also clothing away from couplings, fans and other moving parts.

B. DO NOT attempt to operate the compressor with the fan, coupling or other guards removed.

C. Wear snug-fitting clothing and confine long hair when working around this compressor, especially when exposed to hot or moving parts.

D. Keep access doors, if any, closed except when making repairs or adjustments.

E. Make sure all personnel are out of and/or clear of the compressor prior to attempting to start or operate it.

F. Disconnect and lock out all power at source and verify at the compressor that all circuits are de-energized to minimize the possibility of accidental start-up or operation, prior to attempting repairs or adjustments. This is especially important when compressors are remotely controlled.

G. Keep hands, feet, floors, controls and walking surfaces clean and free of fluid, water, or other liquids to minimize the possibility of slips and falls.

1.6 HOT SURFACES, SHARP EDGES AND SHARP CORNERS

A. Avoid bodily contact with hot fluid, hot coolant, hot surfaces and sharp edges and corners.

B. Keep all parts of the body away from all points of air discharge.

C. Wear personal protective equipment including gloves and head covering when working in, on or around the compressor.

D. Keep a first aid kit handy. Seek medical assistance promptly in case of injury. **DO NOT** ignore small cuts and burns as they may lead to infection.

1.7 TOXIC AND IRRITATING SUBSTANCES

A. DO NOT use air from this compressor for respiration (breathing) except in full compliance with any Federal, State or Local Codes or regulations.

DANGER

Death or serious injury can result from inhaling compressed air without using proper safety equipment.

B. DO NOT use air line anti-icer systems in air lines supplying respirators or other breathing air utilization equipment and **DO NOT** discharge air from these systems in unventilated or other confined areas.

C. Operate the compressor only in open or adequately ventilated areas.

D. Locate the compressor or provide a remote inlet so that it is not likely to ingest exhaust fumes or other toxic, noxious or corrosive fumes or substances.

E. Coolants and lubricants used in this compressor are typical of the industry. Care should be taken to avoid accidental ingestion and/or skin contact. In the event of ingestion, seek medical treatment promptly. Wash with soap and water in the event of skin contact. Consult the compressor operator's manual lubrication section for information pertaining to compressor fluid fill.

F. Wear goggles or a full face shield when adding antifreeze compound to air line anti-icer systems.

G. If air line anti-icer system antifreeze compound enters the eyes or if fumes irritate the eyes, they should be washed with large quantities of clean water for 15 minutes. A physician, preferably an eye specialist, should be contacted immediately.

H. DO NOT store air line anti-icer system antifreeze compound in confined areas.

I. The antifreeze compound used in air line antifreeze systems contains methanol and is toxic, harmful, or fatal if swallowed. Avoid contact with the skin or eyes and avoid breathing the fumes. If swallowed, induce vomiting by administering a tablespoon of salt, in each glass of clean, warm water until vomit is clear, then administer two teaspoons of baking soda in a glass of clean water. Have patient lay down and cover eyes to exclude light. Call a physician immediately.

1.8 ELECTRICAL SHOCK

A. This compressor should be installed and maintained in full compliance with all applicable Federal, State and Local codes, standards and regulations, including those of the National Electrical Code, and also including those relative to equipment grounding conductors, and only by personnel that are trained, qualified and delegated to do so.

B. Keep all parts of the body and any hand-held tools or other conductive objects away from exposed live parts of electrical system. Maintain dry footing, stand on insulating surfaces and **DO NOT** contact any other portion of the compressor when making adjustments or repairs to exposed live parts of the electrical system. Make all such adjustments or repairs with one hand only, so as to minimize the possibility of creating a current path through the heart.

C. Attempt repairs in clean, dry and well lighted and ventilated areas only.

D. DO NOT leave the compressor unattended with open electrical enclosures. If necessary to do so, then disconnect, lock out and tag all power at source so others will not inadvertently restore power.

E. Disconnect, lock out, and tag all power at source prior to attempting repairs or adjustments to rotating machinery and prior to handling any ungrounded conductors.

F. Dry test all shutdown circuits prior to starting the compressor after installation.

1.9 LIFTING

A. If the compressor is provided with a lifting bail, then lift by the bail provided. If no bail is provided, then lift by sling. Compressors to be air lifted by helicopter must not be supported by the lifting bail but by slings instead. In any event, lift and/or handle only in full compliance with Federal, State and Local codes.

B. Inspect points of attachment for cracked welds and for cracked, bent, corroded or otherwise degraded members and for loose bolts or nuts prior to lifting.

C. Make sure entire lifting, rigging and supporting structure has been inspected, is in good condition and has a rated capacity of at least the weight of the compressor. If you are unsure of the weight, then weigh compressor before lifting.

D. Make sure lifting hook has a functional safety latch or equivalent, and is fully engaged and latched on the bail or slings.

E. Use guide ropes or equivalent to prevent twisting or swinging of the compressor once it has been lifted clear of the ground.

F. DO NOT attempt to lift in high winds.

G. Keep all personnel out from under and away from the compressor whenever it is suspended.

H. Lift compressor no higher than necessary.

I. Keep lift operator in constant attendance whenever compressor is suspended.

J. Set compressor down only on a level surface capable of safely supporting at least its weight and its loading unit.

K. When moving compressors by forklift truck, utilize fork pockets if provided. Otherwise, utilize pallet if provided. If neither fork pockets or pallet are provided, then make sure compressor is secure and well balanced on forks before attempting to raise or transport it any significant distance.

L. Make sure forklift truck forks are fully engaged and tipped back prior to lifting or transporting the compressor.

M. Forklift no higher than necessary to clear obstacles at floor level and transport and corner at minimum practical speeds.

N. Make sure pallet-mounted compressors are firmly bolted or otherwise secured to the pallet prior to attempting to forklift or transport them. **NEVER** attempt to forklift a compressor that is not secured to its pallet, as uneven floors or sudden stops may cause the compressor to tumble off, possibly causing serious injury or property damage in the process.

O. DO NOT use the lifting eye bolt on the compressor motor, if supplied, to lift the entire compressor package.

1.10 ENTRAPMENT

A. If the compressor enclosure is large enough to hold a person and if it is necessary to enter it to perform service adjustments, inform other personnel before doing so, or else secure and tag the access door in the open position to avoid the possibility of others closing and possibly latching the door with personnel inside.

B. Make sure all personnel are out of compressor before closing and latching enclosure doors.

DESCRIPTION

2.1 INTRODUCTION

Your new Sullair lubricated rotary screw air compressor will provide you with a unique experience in improved reliability and greatly reduced maintenance.

Compared to other types of compressors, the Sullair rotary screw is unique in mechanical reliability, with “no wear” and “no inspection” required of the working parts within the compressor unit.

Read Section 6 (Maintenance) to see how surprisingly easy it is to keep your air compressor in top operating condition. Should any questions arise which cannot be answered in the following text, call your nearest Sullair representative or the Sullair Corporation Service Department.

2.2 DESCRIPTION OF COMPONENTS

Refer to Figure 2–1. The components and assemblies of the air compressor are clearly shown. The complete package includes **compressor**, **electric motor**, **compressor inlet system**, **compressor discharge system**, **compressor cooling** and **lubrication system**, **capacity control system** and **“Supervisor II Control System”** all mounted on a structural steel frame.

On air–cooled models, the cooling package is remote–mounted and shipped as a separate unit. The separate motor–driven fan cooling package forces air through the coolers, which removes the heat of compression from the cooling fluid.

Both air–cooled and water–cooled versions have easily accessible items such as the fluid filters and control valves. The inlet air filters are also mounted for easy access and servicing.

2.3 SULLAIR COMPRESSOR UNIT, FUNCTIONAL DESCRIPTION

Sullair air compressors feature the Sullair compressor unit, a single–stage, positive displacement, lubricated–type compressor. This unit provides continuous pulse–free air compression to meet your

Figure 2–1 Sullair Series LS–25S Rotary Screw Compressor

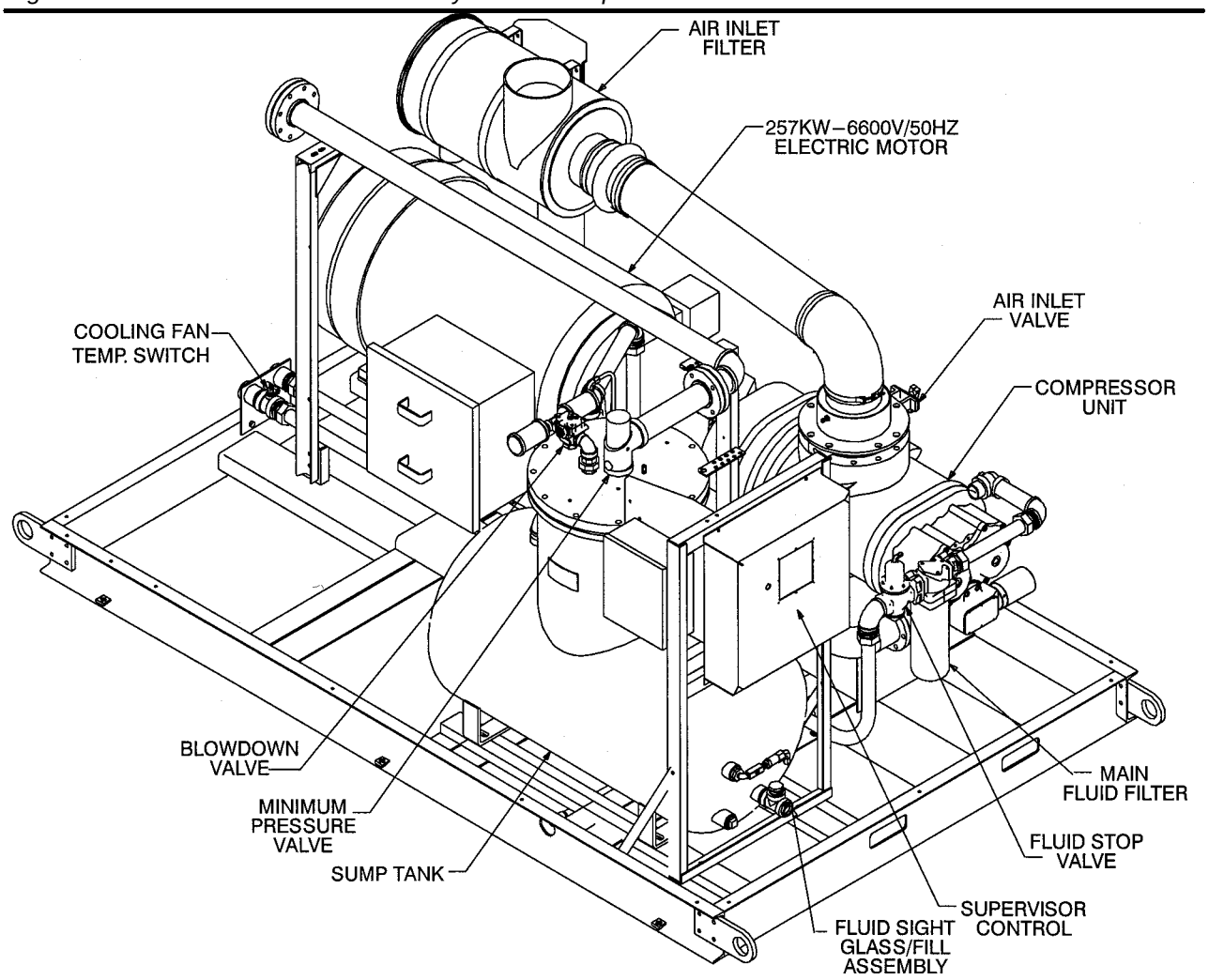

Figure 2–2 Compressor Piping and Instrument Diagram

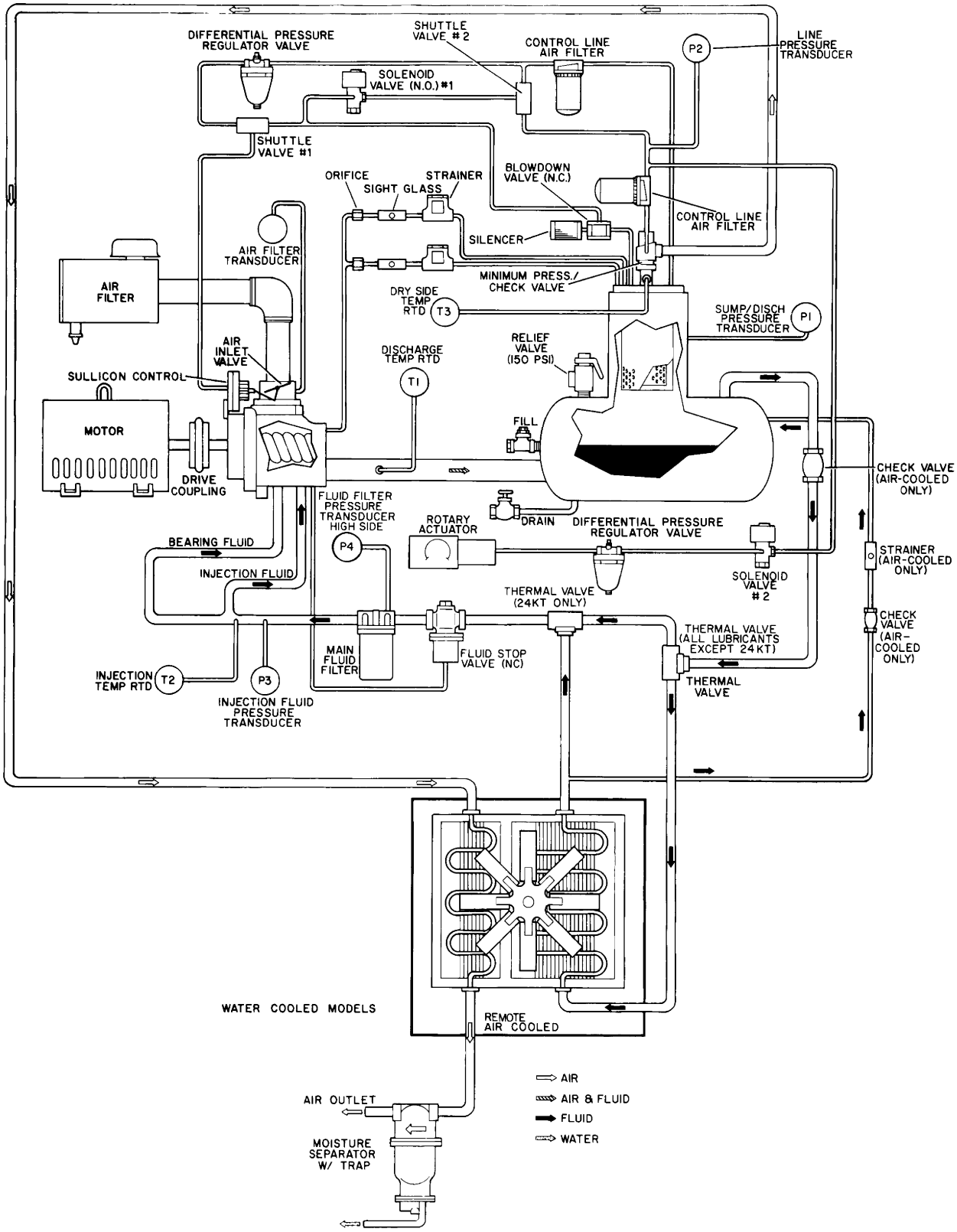

needs. With a Sullair compressor, there is no maintenance or inspection of the internal parts of the compressor unit permitted in accordance with the terms of the warranty.

Fluid is injected into the compressor unit in large quantities and mixes directly with the air as the rotors turn, compressing the air. The fluid flow has three main functions:

- As coolant, it controls the rise of air temperature normally associated with the heat of compression.
- Seals the leakage paths between the rotors and the stator and also between the rotors themselves.
- Acts as a lubricating film between the rotors allowing one rotor to directly drive the other, which is an idler.

After the air/fluid mixture is discharged from the compressor unit, the fluid is separated from the air. At this time, the air flows to the service line and the fluid is cooled in preparation for reinjection.

2.4 COMPRESSOR COOLING AND LUBRICATION SYSTEM, FUNCTIONAL DESCRIPTION

Refer to Figure 2–2. The cooling and lubrication system consists of a **fluid cooler**, **aftercooler**, **full flow fluid filters**, **fluid stop valve**, **thermal valve** and **interconnection piping**. For water–cooled models, a shell and tube fluid cooler and aftercooler are mounted on the compressor package. For air–cooled models, they are radiator–type coolers which are mounted on separate cooling packages.

The pressure in the receiver/sump causes fluid flow by forcing the fluid from the high pressure area of the sump to an area of lower pressure in the compressor unit.

Fluid flows from the bottom of the receiver/sump to the thermal valve. The thermal valve is fully open when the discharge temperature is below 170_F (77_C). The fluid passes through the thermal valve, the main fluid filter and directly to the compressor unit.

As the discharge temperature rises above 170_F (77_C), due to the heat of compression, the thermal valve begins to close and a portion of the fluid then flows through the cooler. In the case of 24KT compressors, as the injection fluid temperature rises above 140_F (60_C), the thermal valve begins to close and a portion of the fluid begins to flow through the cooler. From the cooler, the fluid flows to the main filter and on to the compressor unit. The fluid filter has a replacement element and an integral pressure bypass valve.

The fluid stop valve prevents fluid from filling the compressor unit when the compressor is shut down. When the compressor is operating, the fluid stop valve is held open by air pressure from the compressor unit allowing a free flow of fluid from the receiver/sump back to the compressor unit. On shutdown, the compressor unit pressure is reduced, causing the fluid stop valve to close and isolate the compressor unit from the cooling system.

2.5 COMPRESSOR DISCHARGE SYSTEM, FUNCTIONAL DESCRIPTION

Refer to Figure 2–2. The compressor unit discharges the compressed air/fluid moisture through a discharge check valve into the combination receiver/sump. The discharge check valve prevents air in the receiver from returning to the compression chamber after the compressor has been shut down. The receiver has three functions:

- It acts as a primary fluid separator.
- Serves as the compressor fluid sump.
- Houses the final fluid separator elements.

The compressed air/fluid mixture enters the receiver and is directed against the ends of the tank. The direction of movement is changed and its velocity significantly reduced, thus causing large droplets of fluid to form and fall to the bottom of the receiver/sump. The fractional percentage of fluid remaining in the compressed air collects on the surfaces of the dual separator elements as the compressed air flows through them. Two return lines (or scavenge tubes) lead from the bottom of each separator element to the inlet region of the compressor unit. Fluid collecting on the bottom of each separator is returned to the compressor by a pressure difference between the receiver and the compressor inlet. Sight glasses are located in the return lines to observe this fluid flow. There are also orifices in this return line (protected by strainers) to assure proper flow. By pressing the ΔP1 pad on the Supervisor, the operator may monitor the condition of the separator elements by reading differential pressure on the digital display. At a differential of 10 psid (0.7 bar) or greater, the operator will be told to service the separator element. At this time, separator element replacement is necessary.

The receiver is an ASME pressure vessel. A combination minimum pressure/check valve, located downstream from the separator, assures a minimum receiver pressure of 50 psig (3.4 bar) during full load operation. This pressure is necessary for proper air/fluid separation and proper fluid circulation while supplying air to the system. This valve also acts as a check valve preventing compressed air in the service line from bleeding back into the receiver on shutdown and during operation on the compressor in an unloaded condition.

A pressure relief valve (located on the wet side of the separator) is set to open if the sump pressure exceeds 150 psig (10.3 bar).

The compressor is also equipped with high pressure shutdown protection to shut down the compressor at 135 psig (9.3 bar). This prevents the relief valve from opening and dumping fluid under normal conditions. Also, a high discharge temperature control with three (3) sensing probes is provided to shut down the compressor if the discharge temperature reaches 235_F (113_C).

⚠ WARNING

DO NOT remove caps, plugs, and/or other components when compressor is running or pressurized.

Stop compressor and relieve all internal pressure before doing so.

Fluid is added to the sump via a capped fluid filler opening, located on the tank to prevent overfilling of the sump. A sight glass enables the operator to visually monitor the sump fluid level.

2.6 CONTROL SYSTEM, FUNCTIONAL DESCRIPTION

Refer to Figures 2–3A and 2–3B. The purpose of the compressor control system is to regulate the amount of air being compressed to match the amount of compressed air being used. The capacity control system consists of a spiral valve and an inlet butterfly valve. The functional description of the control system is described below in four distinct phases of operation. The following description text applies to all LS–25S Series compressors ranging from 200 – 350 HP/150 – 261 KW models. For explanatory purposes, this description will apply to a compressor with an operating range of 100 to 110 psig (6.9 to 7.6 bar). A compressor with any other pressure range would operate in the same manner except at stated pressures.

START MODE – 0 TO 50 PSIG (0 TO 3.4 BAR)

When the compressor ON/OFF pad is depressed, the sump pressure will quickly rise from 0 to 50 psig (0 to 3.4 bar). During this period, both the pressure regulator and the solenoid valve are closed and the Sullicon Control is inoperative. The spring on the control holds the butterfly valve fully open while the spiral valve is fully closed (maximum) position and the compressor pumps at full rated capacity. The rising compressor air pressure is isolated from the service line in this phase by the minimum pressure valve set at approximately 50 psig (3.4 bar).

FULL LOAD MODE – 50 TO 100 PSIG (3.4 TO 6.9 BAR)

When the compressed air pressure in the sump rises above 50 psig (3.4 bar), the minimum pressure valve opens, allowing compressed air to flow into the service line. From this point on, the line air pressure is continually monitored by the Supervisor. The pressure regulator and the solenoid valve remain closed during this phase, keeping the Sullicon Control inactive. Both the spiral valve, as well as the inlet butterfly valve, remain in the full load position as long as the compressor is running at 100 psig (6.9 bar) or below.

MODULATION – 100 to 110 PSIG (6.9 TO 7.6 BAR)

As air demand drops below the rated capacity of the compressor, the line pressure will rise above 100 psig (6.9 bar). As a result, the differential pressure regulator for the spiral valve gradually opens, applying air pressure to the spiral valve actuator. Air pressure at the actuator expands the diaphragm. The rack, in turn, engages with the pinion mounted on the spiral valve shaft assembly. This results in a rotary motion. As the spiral valve rotates, it starts opening the bypass ports gradually. Excess air is then being returned back internally to suction end of the compressor unit. Now the compressor is fully compressing only that amount of air which is being used. As air demand keeps dropping further, the spiral valve keeps opening more and more until all the bypass ports are fully open. At this point, the spiral valve has moved into the unload (minimum) position.

The spiral valve provides a modulation range from 100 to 50%. During this period, the pressure rises approximately from 100 to 108 psig (6.9 to 7.4 bar). As the air pressure exceeds 108 psig (7.4 bar), the differential pressure regulator controlling the Sullicon Control opens. This allows the air pressure to expand the diaphragm chamber of the Sullicon Control, which starts partially closing the inlet butterfly valve. The inlet butterfly valve provides modulation range from 50 to 40%. During this period, the pressure rises approximately from 108 to 110 psig (7.4 to 7.6 bar). During this range, the spiral valve remains in the unload position.

UNLOAD MODE – IN EXCESS OF 110 PSIG (7.6 BAR)

When a relatively small amount or no air is being used, the service line pressure continues to rise. When it exceeds 110 psig (7.6 bar), Supervisor de–energizes the solenoid valve allowing line pressure to be supplied directly to the Sullicon diaphragm keeping the inlet butterfly closed; the spiral valve is fully open (minimum) position. Simultaneously, the solenoid valve sends a pneumatic signal to the blowdown valve. The blowdown valve opens the sump to the atmosphere. This reduces the sump pressure to approximately 30 to 50 psig (2.1 to 3.4 bar) which results in low horsepower consumption. The check valve in the air service line prevents line pressure from returning to sump while the compressor is running in the unloaded mode. Both the spiral valve and the butterfly valve remain in the unload position.

When the line pressure drops back to 100 psig (6.9 bar) due to an increase in the air demand, the Supervisor energizes the solenoid valve allowing the air pressure behind the Sullicon Control to be

Figure 2–3A Control System Diagram (Start/ Full Load)

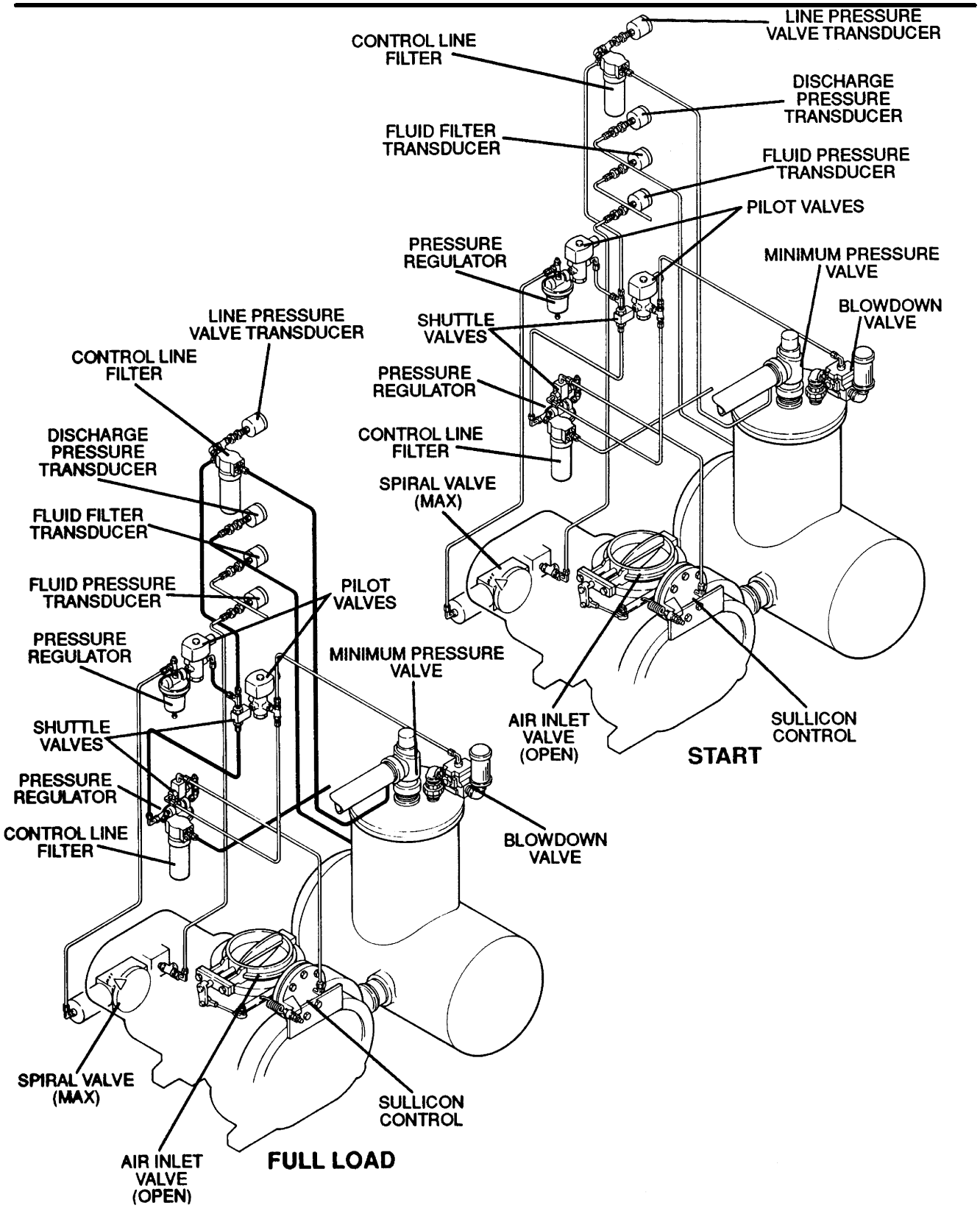

Figure 2–3B Control System Diagram (Modulation/ Unload)

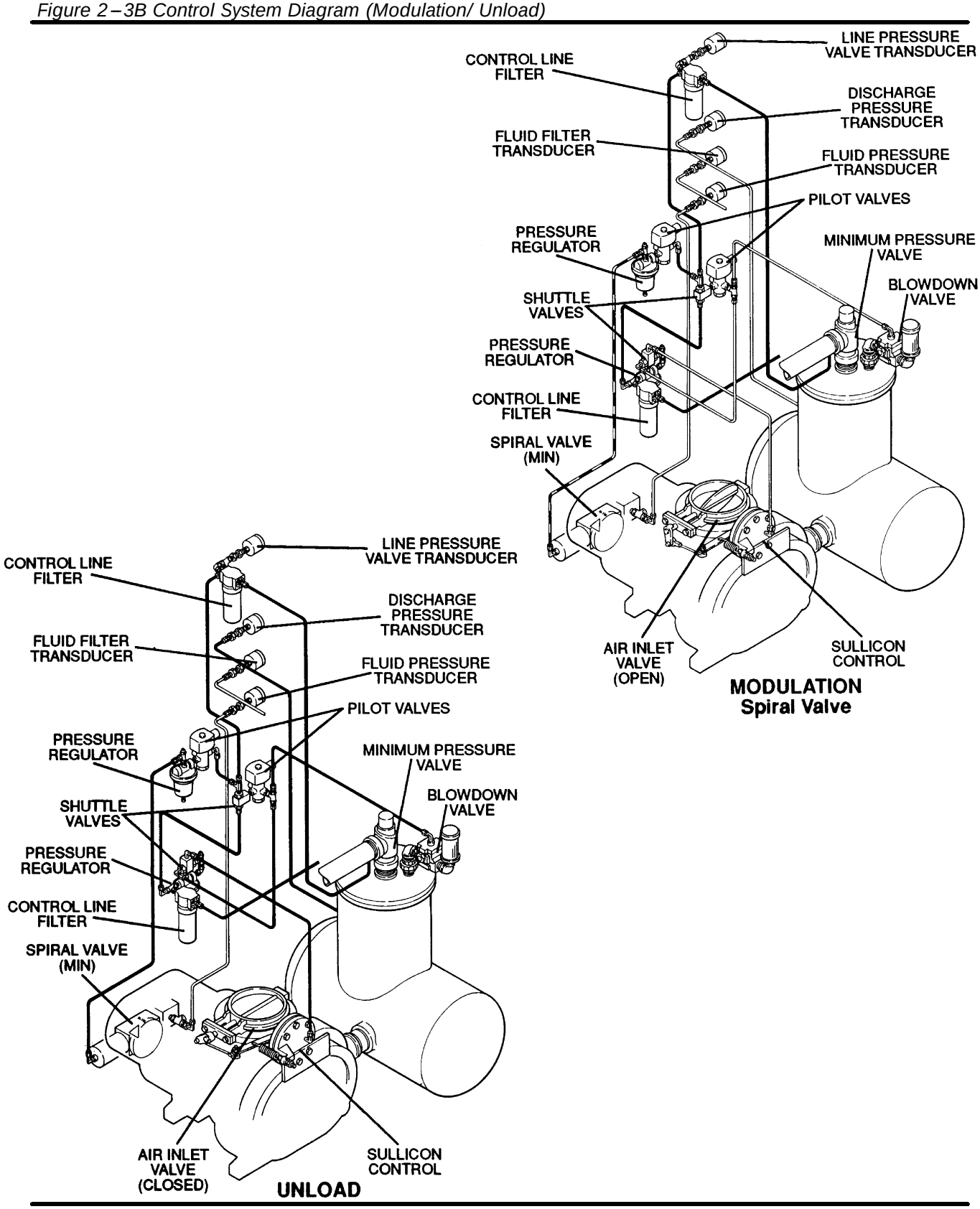

Figure 2–4 Air Inlet System

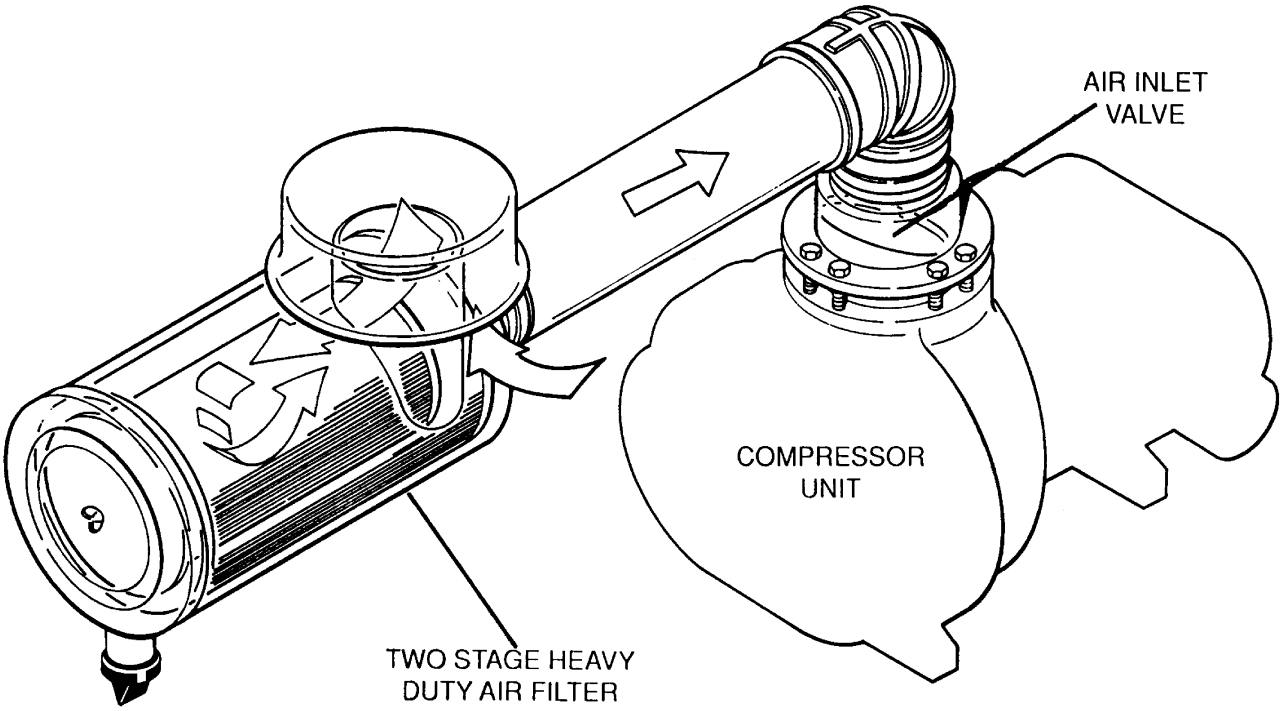

vented through the solenoid valve exhaust port. The blowdown valve closes, and the inlet butterfly valve opens. Also the air pressure at the spiral valve actuator diaphragm is reduced through a vent hole at the spiral valve differential pressure regulator, and a spring in the actuator causes the spiral valve to return to the full load (maximum) position.

AUTOMATIC OPERATION

For applications with varied periods of time when there are no air requirements, Supervisor's Automatic mode allows the compressor to shut down (time delayed) when no compressed air requirement is present, and restart as compressed air is needed.

2.7 AIR INLET SYSTEM, FUNCTIONAL DESCRIPTION

Refer to Figure 2–4. The compressor inlet systems consists of a **dry–type air filter**, a **vacuum switch**, and an **air inlet valve**.

The vacuum switch, located on the compressor Supervisor Control System, indicates the condition of the air filter. When the message "AIR FILTER MAINT RQD" is displayed,maintenance is required.

The butterfly–type air inlet valve directly controls the amount of air intake to the compressor in response to the operation of the Sullicon Control (see Section 2.6, Control System, Functional Description).

2.8. SUPERVISOR II PANEL BASIC INTRODUCTION

Refer to Figure 2–5. The Supervisor II has a two line display to show temperature, pressure and status. It has a keypad for operating the compressor, programming the control points and selecting displays. There is a graphic illustration with lamps that light to show the item being displayed. The lamps flash if that component is in an alarm condition.

2.9 KEYPAD

The keypad is used to control the machine as well as display status and change setpoints. Refer to figure 2–5 for following key descriptions.

S **Stop** – Used to put the machine into manual stop. It is also used to clear alarm conditions.

DESCRIPTION

Figure 2–5 Supervisor II Panel

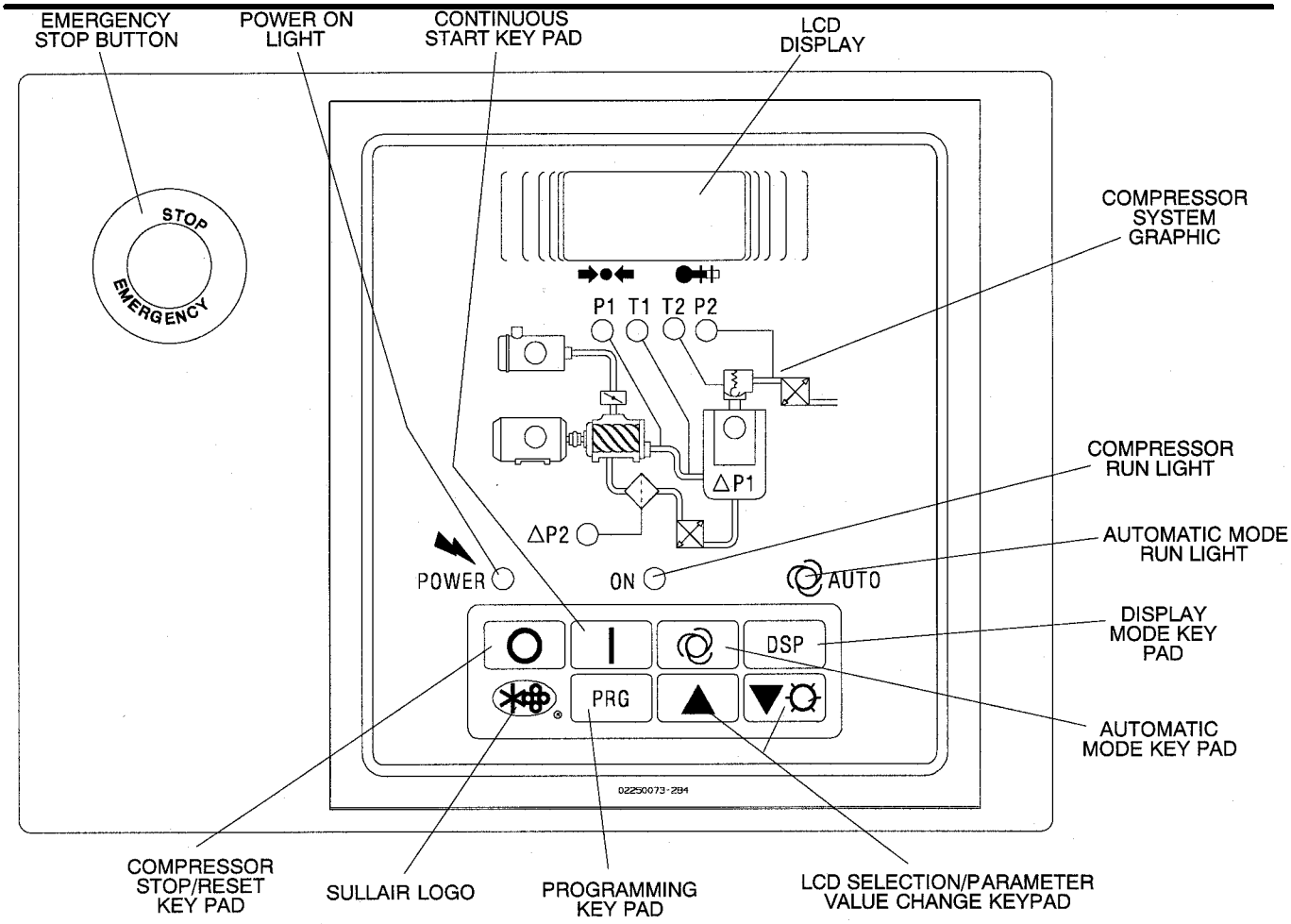

- **Continuous** – Starts machine if no alarm conditions are present. Also used to clear alarm conditions while machine is running.

- **Auto** – Starts machine and selects auto mode if no alarm conditions are present. Also used to clear alarm conditions while machine is running.

- **Display** – Used to display pressures, temperatures and other status information (See section on STATUS DISPLAYS).

- **Logo** – Used for various functions described in later sections

- **Program** – Used to enter the parameter change mode where control parameters may be displayed and changed (See PARAMETER SETUP).

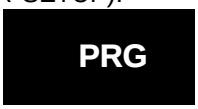

- **Up arrow** – Used in status displays to change displays and in parameter setup mode to increment a value.

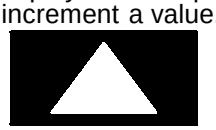

- **Down arrow, lamp test** – Used in status displays to change displays and in param-

eter setup mode to increment a value. When in the default display the key will light all the lamps for three seconds.

2.10 STATUS DISPLAYS

By default the line pressure (P2) and discharge temperature (T1) are shown on the bottom line of the display, and machine status on the top line. The following are the various machine status messages that indicate the state of the compressor:

(Display graphics shown below.)

- **STOP** – Compressor is off.
- **STANDBY** – Compressor is off but armed to start. This state may be entered because of a power up, or the unload timer had expired and stopped the machine. NOTE : The machine may start at any time.
- **STARTING** – Machine is trying to start.
- **OFF LOAD** – Machine is running and off loaded.
- **ON LOAD** – Machine is running and loaded.
- **FULL LD** – Machine is running and fully loaded. This state is only displayed if the machine has a full load valve.
- **RMT STOP** – Compressor is off but armed to start. The machine will start when the remote start contact is closed. NOTE : the machine may start at any time.
- **SEQ STOP** – Compressor is off but armed to start. The machine will start when the sequencing conditions meet the criteria to start. NOTE : the machine may start at any time.

This default display appears as follows:

```
STOP
110   180
```

If there are alarms active they will alternately be shown with the default display. The machine status will be displayed for 2 seconds then the alarms for 2 seconds each. For example:

```
T1 HI
110   180
```

To view other status press the DISPLY key. All temperatures and pressures may be displayed as well as other status information. To scroll through the displays press the up arrow or down arrow keys. Up arrow moves to the next display, down arrow the previous display. To return to the default display press the display key.

- Separator differential pressure and the maximum limit. If the limit is exceeded, a separator maintenance warning will be displayed.

```
ΔP 1  4
MAX 10
```

- Sump pressure and line pressure.

```
P1  113
P2  108
```

- Oil filter differential pressure and the maximum limit. If the limit is exceeded oil maintenance warning will be displayed.

```
ΔP2  4
MAX 20
```

- Pressure before (P4) and after (P3) oil filter.

```
P3  108
P4  113
```

- Oil differential pressure and the minimum limit. If the pressure goes below the limit a P3 LOW shutdown will occur. Oil differential (ΔP3) is defined as P3 – P1/2

```
Δ P3  40
MIN  1
```

- Unit discharge temperature and the maximum limit. If the temperature exceeds the limit a T1 HI shutdown will occur.

```
T1  210
MAX 235
```

- Dry side discharge temperature and the maximum limit. If the temperature exceeds the limit a T2 HI shutdown will occur.

```
T2  210
MAX 235
```

- Oil temperature and the maximum limit. If the temperature exceeds the limit a T3 HI shutdown will occur.

```
T3  210
MAX 235
```

- Total hours that the compressor has been

running.

HRS RUN
001234.0

- Total hours that the compressor has been loaded.

HRS LOAD
000987.0

- Last fault log. This shows the fault on the first line and the run hours when the fault occurred.

T1 HI
@1 234

- Next to last fault log. This shows the fault on the first line and the run hours when the fault occurred.

T1 HI
@2 204

2.11 LAMP INDICATORS

Embedded into the front panel schematic of the compressor are several lamps. Pressing the lamp test key will light all the lamps for 3 seconds. Each LED lamp has the following purpose.

P1 – (Line pressure) If lit steady, signifies that P1 is being displayed, if flashing denotes the presence of an alarm.

P2 – (Sump pressure) If lit steady, signifies that P2 is being displayed, if flashing denotes the presence of an alarm.

P3 – Injection oil pressure (Pressure after oil filter) Same as P1 & P2 except for P3.

P4 – (Pressure before oil filter)

ΔP1 – (Separate differential pressure) If lit steady, signifies that ΔP1 is being displayed, if flashing denotes replacement of separator is needed.

ΔP2 – (Oil filter differential pressure)

ΔP3 – (Oil differential pressure)

T1 – (Dry side discharge temperature) If lit steady, signifies that T1 is being displayed, if flashing denotes the presence of an alarm.

T2 – (Discharge temperature) If lit steady, signifies that T2 is being displayed, if flashing denotes the presence of an alarm.

T3 – (Oil temperature) If lit steady, signifies that T3 is being displayed, if flashing denotes the presence of an alarm.

MOTOR – If flashing, indicates the motor overload contact has opened.

INLET FILTER – If flashing, indicates that inlet filter maintenance is needed.

OIL FILTER – If flashing, indicates that oil filter maintenance is needed.

POWER ON – Lit if 120VAC power is applied to the Supervisor II.

ON – If lit steady, the compressor is running. If flashing, indicates that the compressor is armed but stopped because of restart timer not expired, remote stop or sequence stop. The compressor may start at any time.

AUTO – If lit steady, the compressor is running and in auto mode. If flashing, indicates that the compressor is armed but stopped because of restart timer not expired, remote stop or sequence stop. The compressor may start at any time.

3.1A Identification – LS25S

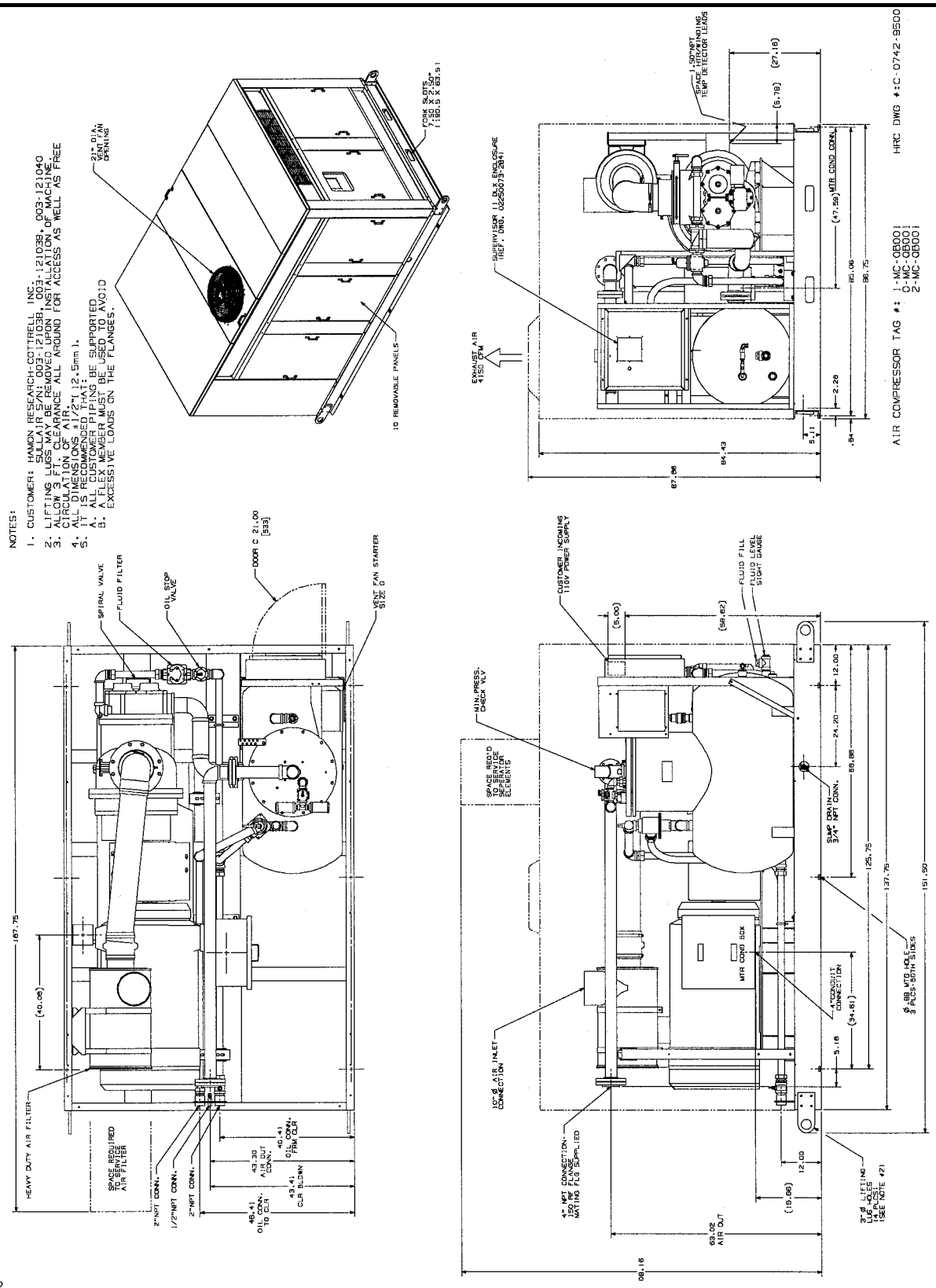

02250122 – 158R2

3.1B Identification – LS25S Cooler Pack

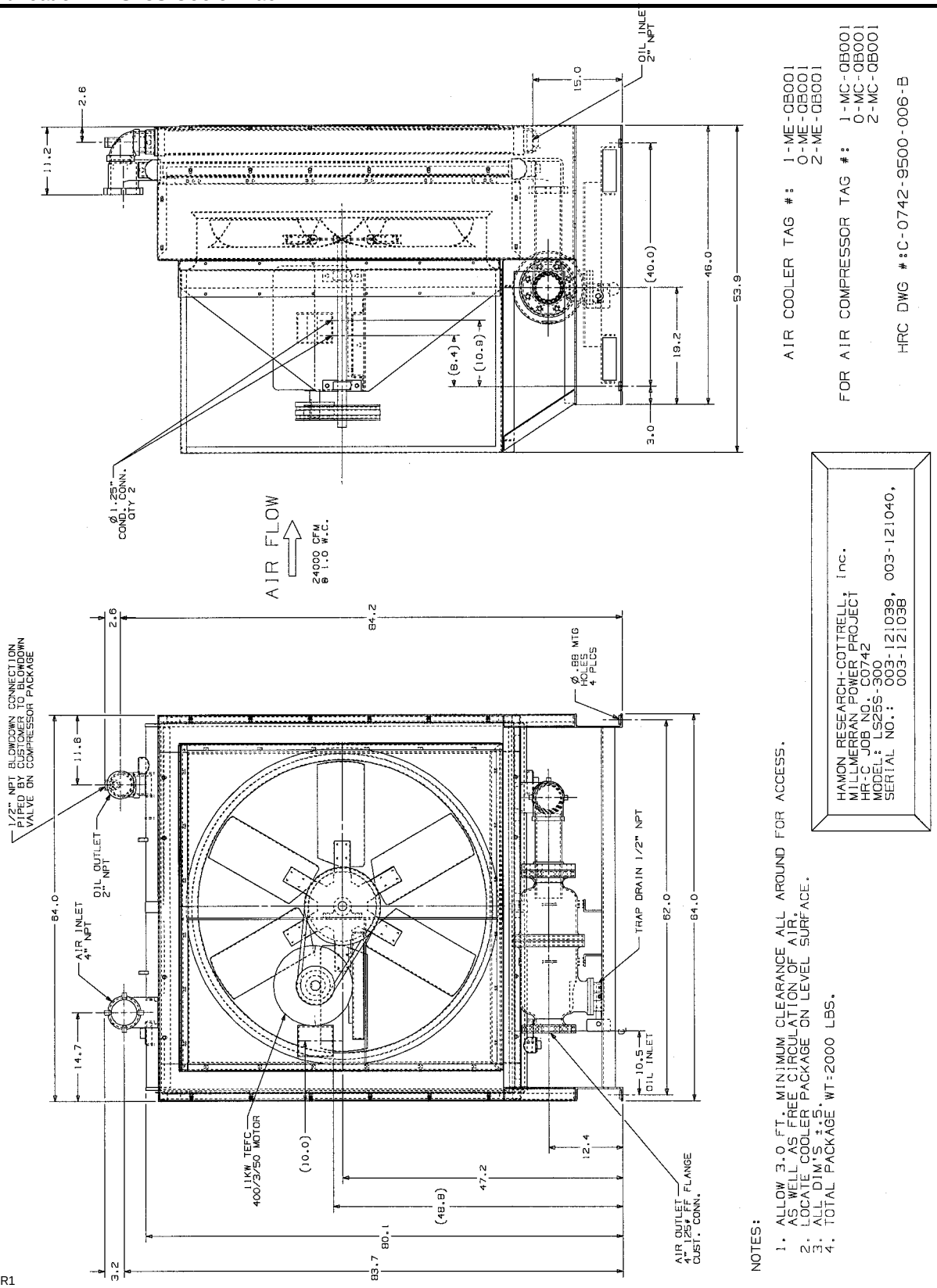

02250122–154R1

3.2 LUBRICATION GUIDE – STANDARD COMPRESSORS

Sullair standard compressors are filled with Sullube fluid as factory fill.

⚠ WARNING

To be sure that you receive the correct fluid for your compressor, when ordering fluid, always confirm your compressor's fluid fill with the parts technician by using your compressor's serial number.

Sullube fluid should be changed every 8000 hours or once a year, whichever comes first. The fluid should be changed more frequently under severe operating conditions, such as high ambient temperatures coupled with high humidity, or when high particulate level, corrosive gases or strong oxidizing gases are present in the air.

⚠ WARNING

Mixing of other lubricants within the compressor unit will void all warranties!

⚠ WARNING

"The Plastic Pipe Institute recommends against the use of thermoplastic pipe to transport compressed air or other compressed gases in exposed above ground locations, e.g. in exposed plant piping." (I)

Sullube should not be used with PVC piping systems. It may affect the bond at cemented joints. Certain other plastic materials may also be affected.

(I) Plastic Pipe Institute, Recommendation B, Adopted January 19, 1972.

3.3 APPLICATION GUIDE

Sullair encourages the user to participate in a fluid analysis program with the fluid suppliers. This could result in a fluid change interval differing from that stated in the manual. Contact your Sullair dealer for details.

NOTES

4.1 MOUNTING OF COMPRESSOR

A foundation or mounting capable of supporting the weight of the compressor, and rigid enough to maintain the compressor frame level and the compressor in alignment is required. The compressor frame must be leveled and secured with foundation bolts, and full uniform contact must be maintained between the frame and foundation. It is recommended that the frame be grouted to the foundation. The compressor unit and driver must be aligned after installation as specified in this Operator's Manual. No piping loads shall be transmitted to the compressor or the cooling package at the external connections.

4.2 VENTILATION AND COOLING

For air–cooled compressors, select a location to permit sufficient unobstructed air flow in and out to the compressor to keep the operating temperature stable. The minimum distance that the compressor should be from surrounding walls is 3 feet/0.9m. To prevent excessive ambient temperature rise, it is imperative to provide adequate ventilation.

Table 1 – Ventilation Requirements indicates the ventilation requirements necessary to keep the compressor running at a normal operating temperature. The fan air requirement is the volume of air which must flow through the compressor for proper ventilation. The specified heat rejection requirement is the amount of heat that is radiated by the compressor. This heat must be removed to assure a normal operating temperature. With air–cooled compressors it is possible to use this heat for space heating, providing excessive pressure drop is not created across the fan. Consult a Sullair office for assistance in utilizing this heat.

DO NOT install a water–cooled or an air–cooled/aftercooled compressor without adequate freeze protection where it will be exposed to temperature less than 32°F(0°C).

4.3 SERVICE AIR PIPING

Service air piping should be installed as shown in Figure 4–1. A shut–off valve should be installed to isolate a compressor from the service line if required. Also notice that the service line should be equipped with water legs and condensate drains throughout the system.

⚠ WARNING

"The Plastic Pipe Institute recommends against the use of thermoplastic pipe to transport compressed air or other compressed gases in exposed above ground locations, e.g. in exposed plant piping." (I)

Sullube should not be used with PVC piping systems. It may affect the bond at cemented joints. Certain other plastic materials may also be affected.

(I) Plastic Pipe Institute, Recommendation B, Adopted January 19, 1972.

4.4 FLUID PIPING (AIR–COOLED ONLY)

To allow depressurization of the cooling package and connecting piping between the compressor and the cooling package upon shutdown of the compressor, a 1/2 in./13mm depressurization line must be installed between the top of the fluid cooler and the sump tank connection, which is located on the fluid supply and return line connection bracket. This line must be maintained at a higher level than the supply and return piping for the fluid cooler.

The supply and return piping for the fluid cooler must be adequately sized to prevent excessive pressure drop. The total pressure drop in the supply and return piping and associated fittings and valves shall not exceed 10 psig (0.7 bar). If the pressure drop is excessive, a pump may be installed. Consult the Sullair Service Department for recommendations.

It is recommended that shutoff valves be installed in the supply and return piping to facilitate compressor components maintenance.

Because of the variability in installations, the fluid necessary to fill the supply and return piping for the fluid cooler is not part of the standard scope of supply for the compressor. The fluid necessary to fill the piping may be ordered from the nearest Sullair representative or the representative from whom the compressor was purchased. To assist in determining the amount of fluid necessary to fill the piping, Consult Table 2 – Fluid/Pipe Size Ratio.

Table 2- Fluid/Pipe Size Ratio

PIPE SIZE	GALLONS OF FLUID PER FOOT OF PIPE
2"	.1635
2 1/2"	.2555
3"	.368
4"	.6542
6"	1.4719

Table 1- Ventilation Requirements

60 Hz MODEL	MOTOR-KW	COMPRESSOR PACKAGE HEAT REJECTION BTU/HR	KCAL/HR	VENT FAN FLOW (I) CFM / M³/MIN	REMOTE AIR-COOLED COOLING PKG HEAT REJECTED BTU / KCAL/HR	AIR FLOW CFM / M³/MIN
(H)	257	65,190	16,428	4150/117.5	848,100/213,721	32,500/920

(I) Applicable to compressors with enclosures.

Figure 4 – 1 Service Air Piping (Typical Installation)

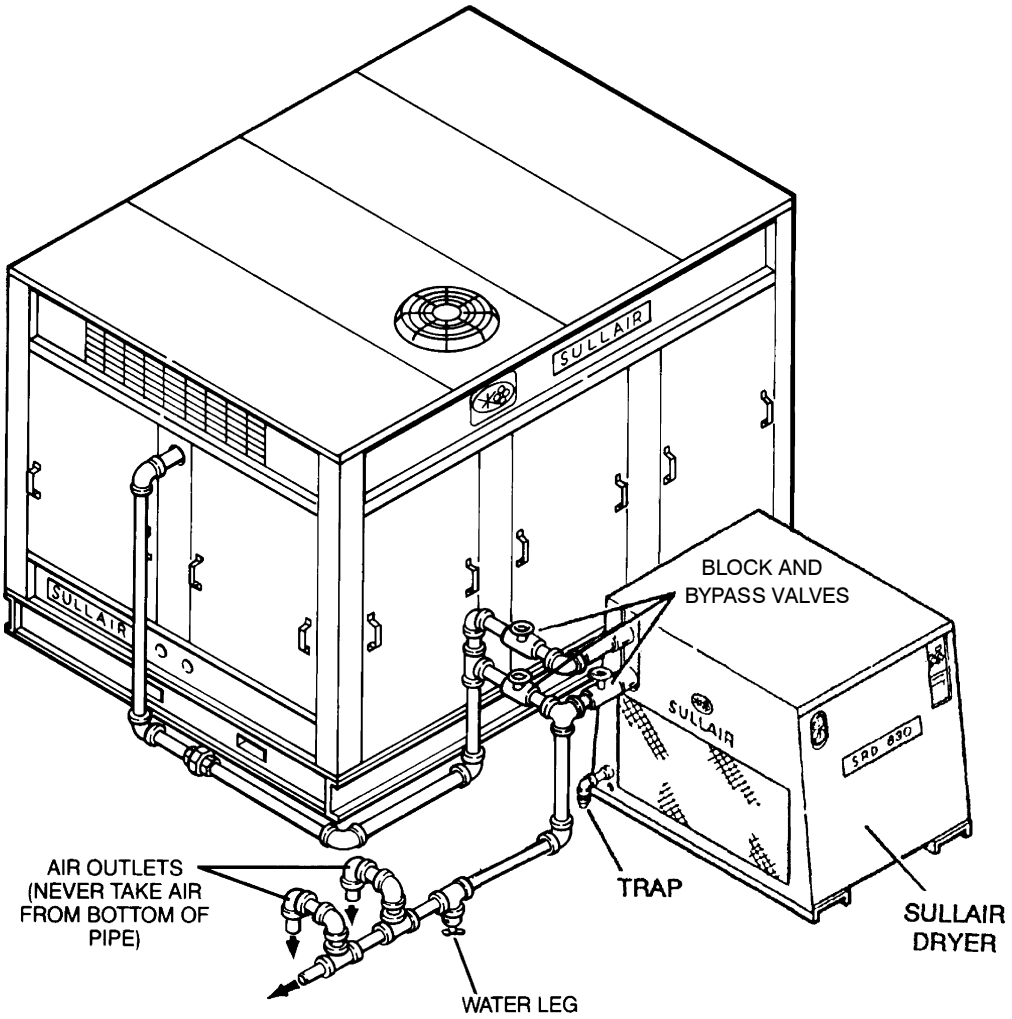

4.5 COUPLING ALIGNMENT CHECK

In preparation for the factory test, the coupling supplied with your compressor is properly aligned for operation. However, due to shipping and handling, it is necessary to recheck the coupling alignment. Refer to Coupling Alignment procedure explained in the Maintenance section of this manual.

4.6 FLUID LEVEL CHECK

Your air compressor is also supplied with the proper amount of fluid. However, it is necessary to check the fluid level at installation. The level is checked by looking at the sight glass located on the sump. If the sump is properly filled, the coolant level should fill 1/2 of the sight glass when the compressor is shutdown.

4.7 ELECTRICAL PREPARATION

Interior electrical wiring is performed at the factory. Required customer wiring is minimal, but should be done by a qualified electrician in compliance with any applicable regional or local electrical code concerning isolation switches, fuse disconnects, etc. Sullair provides a wiring diagram for use by the installer.

⚠ DANGER

Lethal shock hazard inside.

Disconnect all power at source before opening or servicing starter or control panel.

1. Check incoming voltage. Be sure that the incoming voltage is the same voltage that the compressor was wired for.
2. Check starter and overload heater sizes (see electrical parts in Parts Manual).
3. Check all electrical connections for tightness.
4. “DRY RUN” the electrical controls by disconnecting the three (3) motor leads from the

starter. Pull out the EMERGENCY STOP button on the control panel. Depress the PROG pad twice to get to AUTOMATIC/MANUAL mode selection and use the cursor pad to change to MANUAL mode.

5. Reconnect the three (3) motor leads and jog the motor for a direction of rotation check, as explained in Section 4.8.

4.8 MOTOR ROTATION CHECK

After the electrical installation has been done, it is necessary to check the direction of motor rotation. Pull out the **EMERGENCY STOP** button and press once, quickly and in succession, the **(START) I** and **(STOP) O** pads. This action will bump start the motor for a very short time. When looking at the motor rear end, the driveline should be rotating in the direction indicated by the “Direction of Rotation” decal located on the top of the compressor/motor adapter piece. If the reversed rotation is noted, disconnect the power to the starter and exchange any two of the three power input leads, then re–check rotation. A “Direction of Rotation” decal is located on the top of the compressor/motor adaptor piece.

NOTES

5.1 GENERAL

While Sullair has built into this compressor a comprehensive array of controls and indicators to assure you that it is operating properly, you will want to recognize and interpret the reading which will call for service or indicate the beginning of a malfunction. Before starting your Sullair compressor, read this section thoroughly and familiarize yourself with the controls and indicators – their purpose, location and use.

5.2 PURPOSE OF CONTROLS

CONTROL OR INDICATOR	PURPOSE
FLUID LEVEL SIGHT GLASS	Monitors fluid level in the sump. Proper level should fill the sight glass. Check the level when the compressor is shut down. **DO NOT OVERFILL**.
SEPARATOR RETURN LINE SIGHT GLASS	Used to indicate fluid flow in the return line. When the compressor is running at full load, fluid flow should be visible in this sight glass. There may be little or no flow when the compressor is running unloaded, but a sluggish flow at full load indicates a need to clean the return line strainer.
FLUID STOP VALVE	Cuts off flow of fluid to compressor unit at compressor shutdown and allows flow of fluid to the unit on start–up.
DISCHARGE CHECK VALVE	Cuts off the reverse flow of air/fluid mixture through compressor discharge system at compressor shutdown.
THERMAL VALVE	Regulates flow of fluid to and around the cooler. Designed to maintain a minimum operating temperature of 170°F (77°C); used for fast warm–up on start–up.
MINIMUM PRESSURE/CHECK VALVE	Maintains minimum of 50 psig (3.4 bar) in the compressor sump. Valve piston restricts receiver air discharge from receiver/sump when pressure falls to 40 psig (2.8 bar). Prevents line pressure backflow into the sump during unload conditions and after shutdown.
PRESSURE RELIEF VALVE	Opens sump pressure to the atmosphere should pressure inside the sump become too high (150 psig [10.3 bar]). Operation of this valve indicates that the high pressure switch is either faulty or out of adjustment.
SULLICON CONTROL	Regulates the amount of air allowed to enter the air inlet valve. This regulation is determined by the amount of air being used at the service line.
PRESSURE REGULATOR – SULLICON	Opens a pressure line between the sump and Sullicon Control allowing the Sullicon Control to regulate air delivery according to the air demand.
PRESSURE REGULATOR– SPIRAL VALVE	Opens a pressure line between the service line and the spiral valve actuator allowing the spiral valve to regulate air delivery according to air demand.
SOLENOID VALVE #1	Bypasses the pressure regulator valve causing the Sullicon Control to close the inlet valve when the compressor reaches maximum operating pressure.
SOLENOID VALVE #2 (spiral valve control)	Opens when the compressor starts; closes when the compressor is shut off. This prevents any air system loss when the compressor is shut off.

5.2 PURPOSE OF CONTROLS (CONTINUED)

CONTROL OR INDICATOR	PURPOSE
LINE PRESSURE TRANSDUCER (P2)	Senses service line pressure. When line pressure reaches maximum setting, the Supervisor signals the solenoid valve to OFF LOAD the compressor. The message “ON LOAD” or “OFF LOAD” will be displayed to indicate the status of the control. P2 is also used to calculate separator differential pressure ΔP1.
BLOWDOWN VALVE	Vents sump pressure to the atmosphere during unload conditions and shutdown.
WATER REGULATING VALVE (water–cooled only)	Regulates the amount of cooling water used in the cooler to keep the compressor running at a normal operating temperature.
EMERGENCY STOP SWITCH	Pushing in this switch, found adjacent to the Supervisor, cuts all AC outputs from the latter and de–energizes the starter. A fault message (E STOP) is displayed by the Supervisor until the button is pulled out and the “**O**” pad is depressed.

5.3 PARAMETER SETUP

Pressing the program key enters parameter display and edit mode. To move to the next parameter press the program key. To increment a parameter press the up arrow key or logo key. The logo key will increment by 10. To decrement the value press the down arrow key.

The parameters are displayed in the following order:

- **Unload pressure** – The pressure where the machine is unloaded. For example if this parameter is set to 110 PSI (7.6 bar) the machine will unload when the line pressure is above 110 PSI (7.6 bar).

UNLOAD
100 PSI

- **Load differential** – The pressure differential below the unload pressure where the machine is loaded. For example if the unload pressure is set to 110 PSI (7.6 bar) and the load differential is set to 10 PSID (0.7 bar), the machine will load when the line pressure goes below 100 PSI (6.9 bar).

LOAD
10 PSI

- **P1 Max** – Maximum sump pressure. An alarm and shut down will occur when the sump pressure rises above this pressure.

P1 MAX
135 PSI

- **Wye to delta transition timer** – For full voltage starters this parameter is set to 0.

WYE DELT
10 SEC

- **Restart time** – Time to wait after powerup before starting machine. This parameter is used to keep several machines from starting at the same time after power up, or to delay start until other equipment is started. If disabled the machine will not automatically start after power up.

RST TIME
10 SEC

- **Unload Stop Timer** – If the machine is running in AUTO mode, this parameter specifies the ammount of time that the machine will run unloaded before shutting off. If the time is set less than 15 minutes (for example 5), there may be times when the machine will run unloaded for more than 5 minutes. This is because there is another timer that keeps the machine from being started more than four times an hour.

UNLD TIM
15 MIN

• **Language select** – English, German, Spanish, Italian and French may be selected for display language.

LANGUAGE
ENGLISH

• **Units** – English or metric units may be selected.

UNITS
ENGLISH

• **Communications ID #** – This is the network address of a machine. If there is more that one machine connected to the network, each machine must have a unique number

COM ID #
1

• **Communications baud rate** – This should always be selected to 9600 baud for all sequencing modes. It may be lower for slave or monitoring modes.

BAUDRATE
9600

• **Sequence method** – This parameter sets the method used for sequencing. The choices are DISABLED, REMOTE, SLAVE, HOURS, COM ID#. See the Sequencing & Protocol Manual (P/N 02250057–696) for details about these modes.

SEQUENCE
HOURS

• **Drain interval** – The time between actuation of the drain valve.

DRN INTV
10 MIN

• **Drain time** – The amount of time that the drain valve is actuated.

DRN TIM
1 SEC

• **Last Communication Number** – Used only for sequencing, see Sequencing & Protocol Manual for details.

LAST COM
3

• **Lowest Allowable Pressure** – Used only for sequencing, see Sequencing & Protocol Manual for details.

LOWEST
90 PSI

• **Recovery Time** – Used only for sequencing, see Sequencing & Protocol Manual for details.

RECOVER
10 SEC

•**Rotate Time** – Used only for sequencing, see Sequencing & Protocol Manual for details.

ROTATE
50

• **Machine Capacity** – Used only for sequencing, see Sequencing & Protocol Manual for details.

CAPACITY
100

• **Sequence Hours** – Used only for sequencing, see Sequencing & Protocol Manual for details.

SEQ HRS
1000

5.4 OPERATING THE COMPRESSOR

Before operating the compressor the operating parameters must be setup. See the previous section on operating parameter setup.

MANUAL OPERATION MODE

In this mode the compressor will run indefinitely, as long as temperatures and pressure remain within the valid operating ranges, and the motor overload or emergency stop contacts are not tripped. Pressing the "**I**"will turn on the compressor and put it in manual mode. If the compressor is already running, but in automatic mode, pressing "**I**" will switch operation to manual. Pressing "**I**" while already running in manual mode will cause the Supervisor to turn off the common fault relay, if engaged, and clear any maintenance indicators.

To stop the compressor, press "**O**". If the compres-

sor is already off when "**O**" is pressed, the common fault relay will be turned off, if engaged, and it will try to clear the alarm and maintenance indicators. Regardless of what the compressor is doing, pressing "**O**" puts the Supervisor in manual stop mode.

AUTOMATIC OPERATION MODE

In this mode the compressor will start if line pressure (P2) is less than the **LOAD** parameter. It will stop if the compressor runs unloaded for the number of minutes indicated by the **UNLD TIM** parameter . To put the compressor in automatic mode press "". If P2 is already less than **LOAD** the compressor will start immediately, otherwise the system status will indicate **STANDBY** and the LED marked **AUTO** will flash.

If the compressor is already running, but in continuous mode, pressing "" will switch operation to automatic. Pressing "" while already running in automatic mode will cause the Supervisor to turn off the common fault relay, if engaged, and clear any maintenance indicators.

In automatic mode the compressor can be stopped manually by pressing **O**. Stopping the compressor using **O** will put the Supervisor in manual stop mode.

Regardless of whether in "automatic" or "manual" mode, control of the load solenoid will be based on the parameters **UNLD** and **LOAD.** This operation is as follows:

P2 > UNLD – – > load solenoid turned off
P2 < LOAD – – > load solenoid turned on

POWER FAILURE RESTART

If the restart timer (RST TIME parameter) is disabled the compressor will not try to start after a power up. If this time is set to a value the machine will go into standby after power up. When the line pressure drops below the load setpoint, the restart timer will start timing. When the timer expires the machine will start.

SEQUENCING MODES

The following is a brief description of sequencing modes, for details see the Supervisor II Sequencing & Protocol Manual (P/N 02250057–696).

- **DISABLED** – Responds to status and parameter change messages via the RS485 network but will not respond to start, stop, load or unload messages.
- **REMOTE** – Responds to status and parameter change messages but will not respond to start, stop, load or unload messages. The remote inputs and outputs are enabled (start/stop, load/unload, master/local).
- **SLAVE** – Will respond to all messages, but will not start or load unless commanded to do so by a message. This mode is used to control the machine from a master computer.
- **HOURS** – Sends status message about once a second, starts, loads and unloads machines based on sequencing hours.
- **COM ID #** – Sends status message about once a second, starts, loads and unloads machines based on machine Com ID#.

5.5 SUPERVISOR OUTPUT RELAYS

RELAY	OPERATION
RUN RELAY (K1)	Contact closure energizes the compressor starter.
*–DELTA (K2)	A timed contact used to provide wye–delta transition time.
UNLOAD/LOAD (K3)	Controls ON LOAD/OFF LOAD operator of the load control solenoid valve.
COMMON FAULT (K4)	May be used to provide remote indication of any pre–alarm, maintenance or fault shutdown condition.
DRAIN VALVE (K5)	Controls a solenoid valve to provide automatic condensate removal.
FULL LOAD/MODULATE (K6)	Used with sequencing feature.

NOTE: All output relays will handle 8 amperes at 120/240 VAC.

5.6 INITIAL START–UP PROCEDURE

The following procedure should be used to make the initial start–up of the compressor:

1. Read the preceding pages of this manual thoroughly.
2. Be sure that all preparations and checks described in the Installation Section have been made.
3. Crack open the shut off valve to the service line.

⚠ WARNING

Be sure that the depressurization line between the sump and the air–cooled cooler package is connected as explained in Section 4 (Paragraph 4.4).

4. Start the compressor by pressing the "**I**" (Start) pad.
5. Check for possible leaks in piping.
6. Slowly close the shut–off valve and check that the maximum pressure (P2) and pressure differential (P2) are correctly programmed.
7. Observe the operating temperature. If the operating temperature exceeds 212°F (100°C), the cooling system or installation environment should be checked.
8. Observe return line sight glasses and maintenance indicators.
9. Open shut–off valve to service line.
10. Reinspect the compressor for temperature and leaks the following day.

5.7 SUBSEQUENT START–UP PROCEDURE

On subsequent start–ups, check that the proper level is visible in the fluid level sight glass and simply press "**I**" for manual or "◎" for automatic operation. When the compressor is running, observe the various parameter displays.

5.8 SHUTDOWN PROCEDURE

To shut the compressor down, push "**O**" pad.

NOTES

6.1 MAINTENANCE INTRODUCTION

As you proceed in reading this section, it will be easy to see that Maintenance Program for the air compressor is quite minimal. The Supervisor monitors the status of the air filter, fluid filter, and separator elements. When maintenance to these devices is required, the Supervisor will display the appropriate maintenance message and flash the location LED on the graphics map as a visual reminder.

⚠ WARNING

DO NOT remove caps, plugs, and/or other components when compressor is running or pressurized.

Stop compressor and relieve all internal pressure before doing so.

6.2 DAILY OPERATION

Following a routine start, observe the various Supervisor displays to check that normal readings are being made – previous records are very helpful in determining the normalcy of the measurements. These observations should be made during all expected modes of operation (i.e. full load, no–load, different line pressures, cooling water temperatures, etc.).

During the initial start–up or servicing of the package, fluid may have to be added to the sump vessel to restore an adequate level. Frequent fluid additions to maintain said level would be indicative of excessive fluid consumption, and should be investigated – see the Troubleshooting Section of this manual for probable cause and remedy.

6.3 MAINTENANCE AFTER INITIAL 50 HOURS OF OPERATION

After the initial 50 hours of operation, a few maintenance requirements are needed to rid the system of any foreign materials which may have accumulated during compressor assembly. Perform the following maintenance operations to prevent unnecessary problems.

1. Clean the return line strainers.
2. Clean the return line orifices.
3. Change the fluid filter elements.
4. Clean the control line filters.

6.4 MAINTENANCE EVERY 1000 HOURS

After 1000 hours of operation, it will be necessary to perform the following:

1. Clean the return line strainers.
2. Lubricate the Sullicon Control linkage.
3. Replace the fluid filter element.

6.5 FLUID CHANGE

Standard models are filled with the long life lubricant Sullube.

Sullube should be changed under the following conditions, whichever occurs first:

1. Every 8000 hours.
2. Once a year.
3. As indicated by fluid analysis.

For compressors filled with 24KT, the fluid needs to be changed only when indicated by fluid analysis or if the fluid has been contaminated.

A fluid sample at every 4000 hours is recommended. Return fluid to Sullair Corporation in Michigan City for free analysis. To facilitate this, a sample bottle is included with the compressor.

6.6 SEPARATOR MAINTENANCE

Replace the separator elements when the separator maintenance message is displayed or after one (1) year, whichever comes first. The separator elements must be replaced. **DO NOT** clean the separator elements.

6.7 PARTS REPLACEMENT AND ADJUSTMENT PROCEDURES

MAIN FILTER MAINTENANCE

Refer to Figure 6–1. The main filter (P/N 250007–219) is located schematically between the compressor cooler and the compressor injection port. When servicing the main filter, shut the compressor down, make sure all pressure has been released, then follow the instructions below. For element replacement order kit number 250008–956.

Figure 6–1 Main Filter (P/N 250007–219)

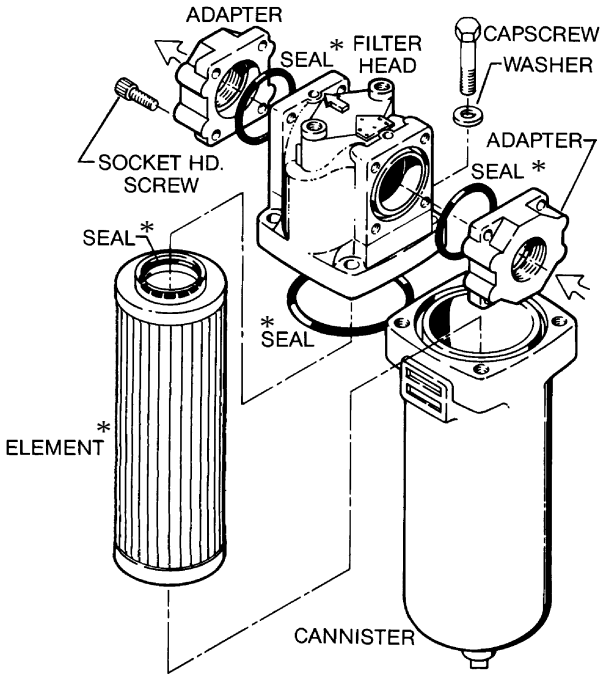

* Repair Kit P/N 250008–956

⚠ CAUTION

To minimize the possibility of filter element rupture, it is important that ONLY replacement elements identified with the Sullair name, logo and appropriate part numbers be used, and that substitute elements NOT be used, due to the fact that such filters may have inadequate or questionable working pressure ratings.

1. Remove the four (4) capscrews which secure the filter head to the canister.
2. Pull the canister away from the filter head. The filter elements will be attached to the head.
3. Separate the element from the filter head.
4. Remove the canister seal.
5. Thoroughly clean the filter head and canister in solvent.
6. Lubricate the new seals with the same type of fluid used in the compressor and position each seal in its appropriate place.
7. Carefully push the element into position under the housing and replace the capscrews, securing the canister and filter head.

AIR FILTER MAINTENANCE

Refer to Figure 6–2. Air filter maintenance should be performed when the air filter maintenance message is displayed. The air filter is equipped with a primary element and a secondary element. As previously stated, the Supervisor will alert you as to when the primary element maintenance is necessary. When removing the primary element, always check the secondary element for visible dirt, grease or damage. The secondary element must be changed after every sixth primary element inspection. **DO NOT** clean the secondary element.

ELEMENT REMOVAL

1. Clean the exterior of the air filter housing.
2. Remove the cover assembly by loosening the wingnut securing it.
3. Pull the element assembly out of the housing.
4. Clean the interior of the housing by using a damp cloth. **DO NOT** blow dirt out with compressed air.
5. Inspect the secondary element and replace if necessary. This element is not cleanable.
6. To remove the secondary element, remove the hex nut and sealing washer from the threaded

Figure 6–2 Air Filter Replacement (P/N 250006–718)

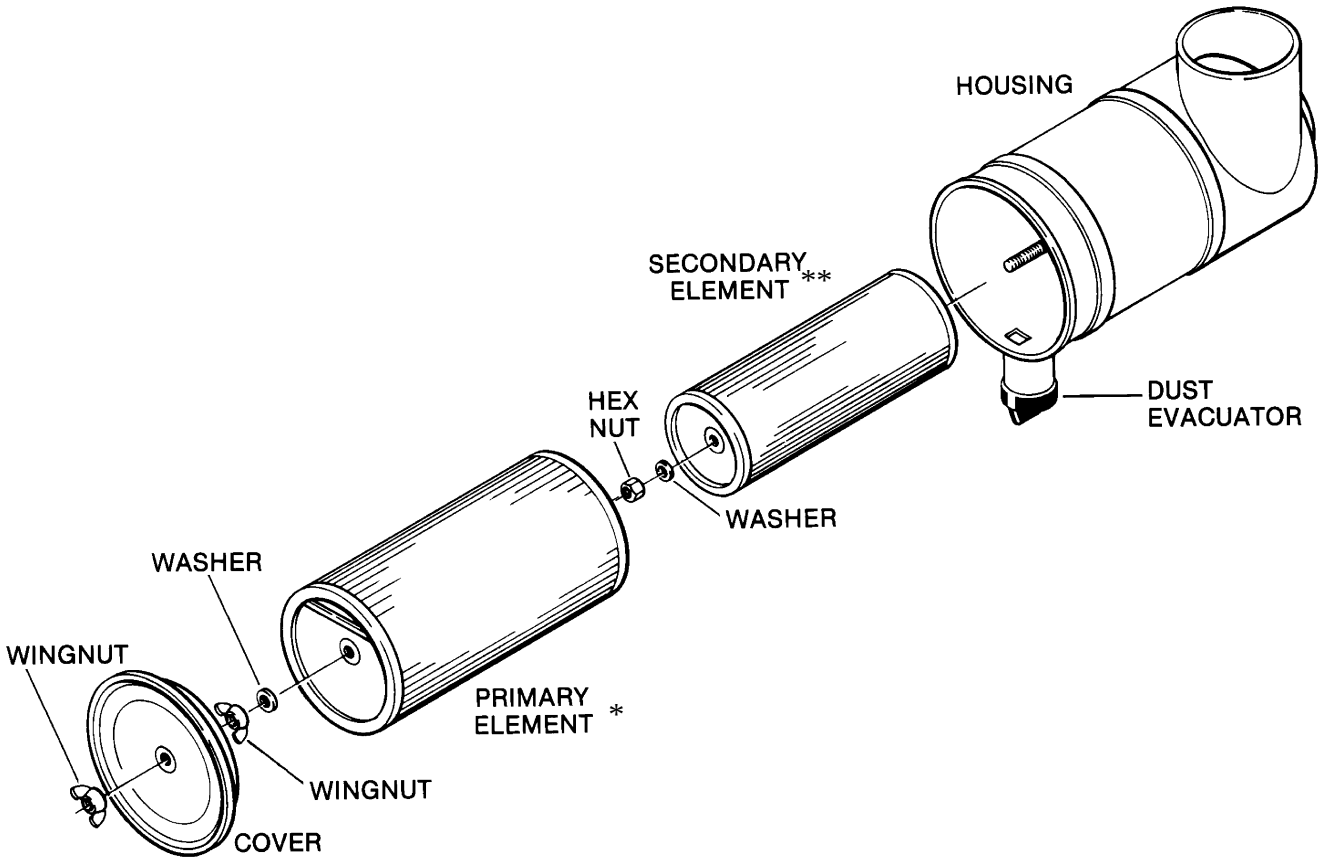

* Replacement element P/N 250007–838 (primary)
** Replacement element P/N 250007–839 (secondary)

rod running through the element and pull the element out of the housing.
7. Install the new secondary element and replace the sealing washer and hex nut.
8. With the secondary element in place, replace the primary element.

ELEMENT INSPECTION
1. Place a bright light inside the element to inspect for damage or leak holes. Concentrated light will shine through the element and disclose any holes.
2. Inspect all gaskets and gasket contact surfaces of the housing. Should faulty gaskets be evident, correct the condition immediately.
3. If the clean element is to be stored for later use, it must be stored in a clean container.
4. After the element has been installed, inspect and tighten all air inlet connections prior to resuming operation.

PRIMARY ELEMENT REPLACEMENT
1. Place the element in position over secondary element. Replace the sealing washer and wingnut. Tighten the wingnut so as to fully seat the element gasket.
2. Install the cover/element assembly and replace the wingnut.

SEPARATOR ELEMENTS REPLACEMENT
Refer to Figure 6–3. The separator elements must be changed when "Separator Maintenance Required" message is displayed, or once a year whichever occurs first. Order separator elements, number 250034–124 (primary) and number 250034–130 (secondary). Follow the procedure explained below for separator element replacement.

1. Relieve all pressure from the separator and all compressor lines.
2. Disconnect all piping connected to the separator cover (return lines, service lines, etc.) to allow removal.
3. Loosen and remove the twelve (12) 3/4" x 3" hex head capscrews from the cover plate.
4. Lift the cover plate from the separator.
5. Remove the primary and secondary separator elements.
6. Scrape the old gasket material from the cover and flange on the sump being careful not to let the scraps fall into the sump.
7. Inspect the receiver/sump tank for rust, dirt, etc.
8. Reinsert the separator elements with gaskets attached into the sump taking care not to dent it against the tank opening. **DO NOT** remove grounding staples.
9. Clean the underside of the separator tank cover and remove any rust. **DO NOT** remove the staples from the gaskets.
10. Replace the cover plate, washers and capscrews. Torque to 200 ft.–lbs. (271 Nm).
11. Reconnect all piping making sure return line tubes extend to the bottom or 1/4 in./6mm above the bottom of the separator element. This will assure proper fluid return flow to the compressor.
12. Check the return line strainer before restarting the compressor (order replacement kit number 241772 if required).

DIFFERENTIAL PRESSURE REGULATOR ADJUSTMENT
The differential pressure regulators are adjusted by loosening the adjusting screw on the end of the

Figure 6–3 Separator Element Replacement

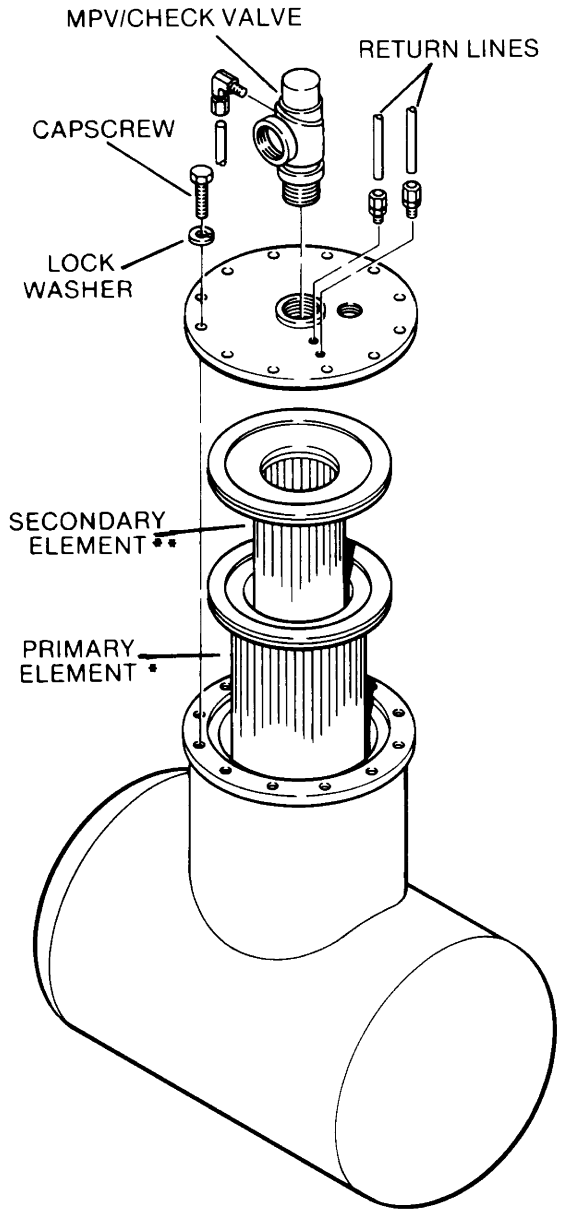

* Replacement element kit P/N 250034–124 – primary
** Replacement element kit P/N 250034–130 – secondary

Figure 6–4 Pressure Regulator Valves (P/N 408275–Control) & (P/N 406929–Spiral Valve)

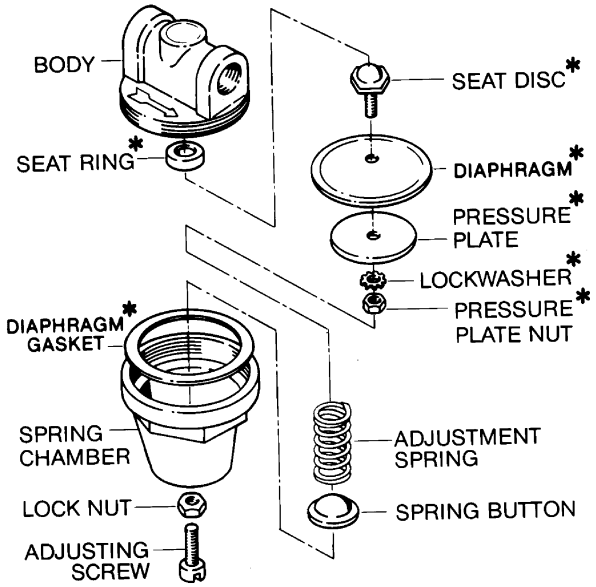

*Repair Kit P/N 250028–693 (for 408275)
*Repair Kit P/N 041742 (for 406929)

cone shaped cover of the pressure regulator. When the jam nut is loose, turn the adjusting screw clockwise to increase or counterclockwise to decrease the setting.

Above 100 psig (6.9 bar), the spiral valve regulator should allow pressure to flow into the chamber of the spiral valve actuator. The spiral valve should start to rotate at this time.

At approximately 108 psig (7.4 bar), the Sullicon regulator should allow pressure to flow into the control chamber of the Sullicon Control. The Sullicon Control level should start to move at this time. Cycle the Control System several times and recheck all pressure settings.

PRESSURE REGULATOR VALVE MAINTENANCE

Refer to Figure 6–4. Pressure regulator valves (P/N 408275 and P/N 406929) maintenance normally requires the replacement of the internal diaphragm. Use repair kit number 250028–693 (for 408275), or number 041742 (for 406929), and follow the procedure below for proper installation.

1. Loosen the locknut and turn the adjusting screw counterclockwise until the inner spring tension is relieved. The adjusting screw should turn freely when the spring tension is relieved.
2. Remove the spring housing from the body to allow access to internal parts.
3. Next, remove the spring button and the spring. The dampener will stay inside the spring as it is removed. Leave the dampener inside the spring as there is no need to remove it.
4. After removing the spring, remove the gasket stop and brass gasket.
5. At this time, remove the pressure plate nut and disassemble the pressure plate, diaphragm, diaphragm gasket (rubberized asbestos), seat disc and seat gasket.
6. Remove and discard the seat ring.
7. The next step is to reassemble the regulator using the new parts provided in your repair kit.
8. Reassemble the diaphragm, pressure plate, gasket, seat disc and seat disc gasket and tighten the nut. All of these parts with the exception of the pressure plate are provided in the repair kit.
9. Replace the seat ring with the new seat ring provided.
10. Replace the existing brass gasket and diaphragm gasket stop.
11. Next, place these parts in their proper place on the body and replace the spring as it was prior to disassembly.
12. Place the spring button over the spring as shown.
13. With all parts in order, replace the spring chamber and tighten.
14. Tighten the adjusting screw until tension is realized.
15. At this time, refer to Differential Pressure Regulator Adjustment Procedure to readjust the control regulator.

DRIVE COUPLING INSTALLATION AND ALIGNMENT

Refer to Figures 6–5, 6–6, 6–7 and 6–8. For coupling installation and alignment, the tools required are a straight edge, a measuring scale, one set of feeler gauges, a set of standard Allen wrenches, one set of standard socket wrenches, and a 17mm end wrench for shrink disc locking screws.

⚠ WARNING

Disconnect all power at source, before attempting maintenance or adjustments.

Use the following procedure for proper maintenance and alignment of the coupling:

1. Disassemble the coupling. Note arrangement of bolts, washers, and nuts as they must be replaced in the same order.
2. Inspect both shafts and hub bores, making sure they are free of burrs. File if necessary. Be sure the key fits the motor shaft properly. For installation of the drive coupling, follow the steps below:

STEP 1 – MOUNT HUBS

Motor Hub – This hub has an interference fit. Heat the hub using an oven, oil bath or an induction heater up to 300_F (149_C). Mount the hub to the motor shaft as quickly as possible. The hub face must be flush to the motor shaft. Allow hub to cool before proceeding.

Figure 6–5 Drive Coupling

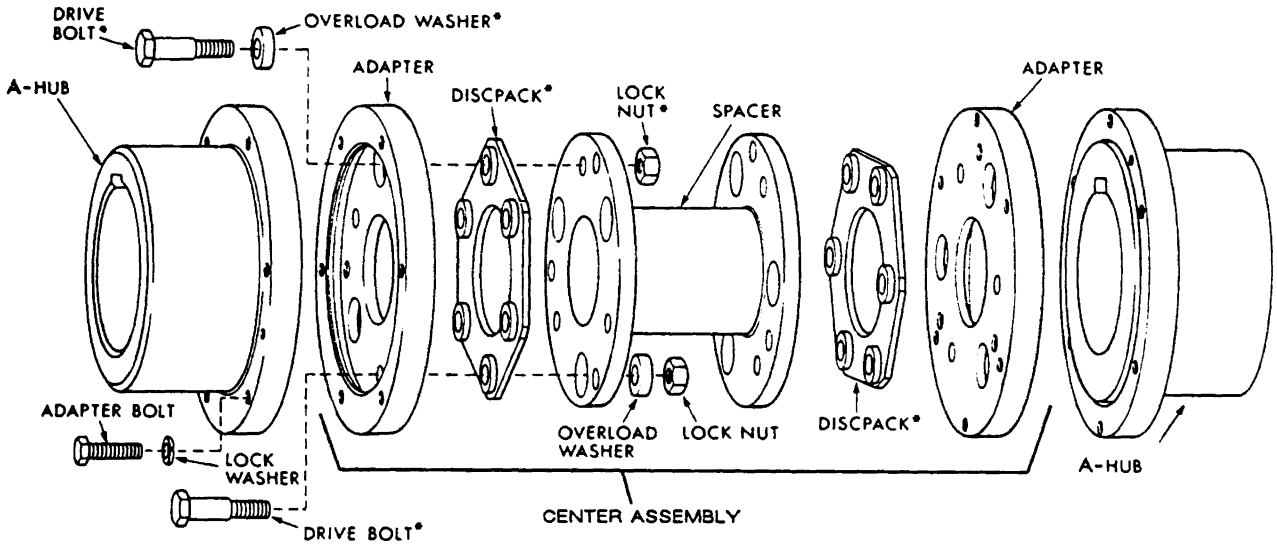

* Repair Kit P/N 02250127–781

Compressor Hub – This hub has a slide fit to the compressor. A special shrink disc hub is used to transmit power. Slide compressor hub and shrink disc assembly on to the compressor shaft. Shaft should be recessed 3/8" (9.5mm) from the face of the hub. Gradually tighten all shrink disc locking screws to 42 ft.–lbs. (57 Nm) (see Installation of Shrink Disc and Figure 6–6).

Figure 6–6 Bolt Tightening

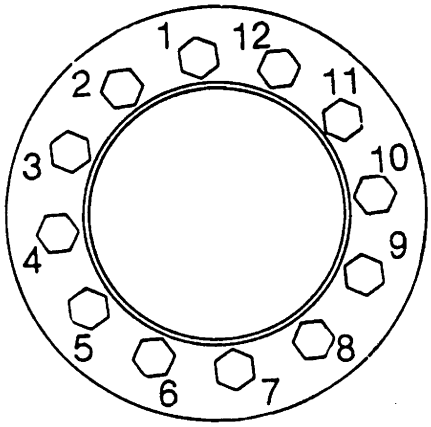

STEP 2 – CHECK ALIGNMENT

Angular – Take readings with an inside micrometer at 90_ intervals between flange faces. If a dial indicator is used, compensate for sag and attach it on one shaft and rotate the hub 360_ while taking readings on the flange face as shown. **DO NOT** exceed installation ANGULAR limit specified in Table 1. When using a dial indicator, the best results are achieved by rotating both driver and driven shafts together.

⚠ CAUTION

Dial indicator face readings should not be used on journal bearing equipment due to the liberal end float inherent in such a design.

TABLE 1– INSTALLATION DATA (Refer to Figure 6–6)

Bolt Description	Tightening Torque ft.–lbs/Nm (oiled)	Coupling Gap (inches/cm)	Max. Operating Misalignment		
			Coupling Parallel Offset (inches/cm)	Angular	
				degrees	**(I)** inches/cm
Adaptor Bolt	28 in./ 38cm	7.0 ± .015 in./ 17.8 ± .04 cm	.005 in./ .01cm	.5	.005 in. .01 cm
Drive Bolt	169 ft–lbs./ 229 Nm				

(I) Angular misalignment in inches equals maximum A minus minimum B as shown in Figure 7–6. **DO NOT** exceed values in Table above.

Figure 6–7 Compressor Hub Cutaway

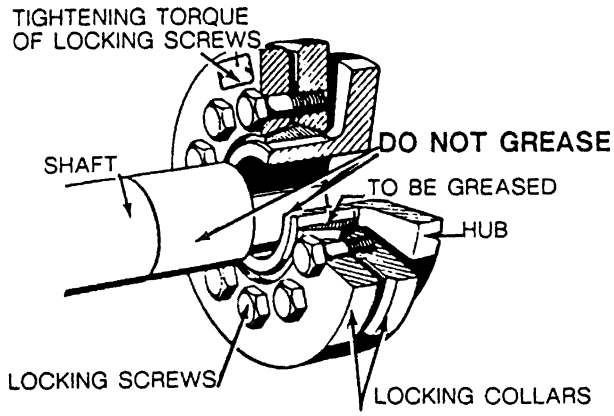

Parallel Offset – Refer to Figure 6–8. Lay a straight edge squarely across the top of the flanges of both shaft hubs as shown and also at a point 90_ away. This value must not exceed the installation Parallel Offset indicated in Table 1. If a dial indicator is used, compensate for sag and attache it on one shaft and rotate the hub 360_ while taking readings on the other hub male register outside diameter. **DO NOT** exceed the installation Parallel Offset limits as calculated in Table 1.

STEP 3 – INSTALLATION OF CENTER ASSEMBLY – Check the drive bolts (see Figure 6–6) of center assembly for proper torque per Table 1, before installation. Place the center assembly into position between the two (2) hubs. Dip adapter bolts (see Figure 6–6) in SAE 30 oil and insert bolts with lockwashers through hub flange holes and engage tapped holes in each adaptor. Tighten adapter bolts to recommended torque per Table 1. After torquing all adapter bolts, recheck the alignment.

STEP 4 – INSTALLATION OF SHRINK DISC
Refer to Figures 6–6 and 6–7. Shrink discs are supplied ready for installation. Therefore, they should not be disassembled prior to initial installation.

INSTALLATION SEQUENCE
1. Remove spacers placed between collars for protection during transportation.
2. Take any three locking screws forming the points of an equilateral triangle (e.g. screw 1, 5 and 9 in Figure 6–6) and tighten them slightly until the inner ring can still just be turned.
3. Slide shrink disc over the hub. The hub outside surface can be greased.

⚠ WARNING

Never tighten locking screws before shaft is inside the hub.

Figure 6–8 Parallel Offset Alignment

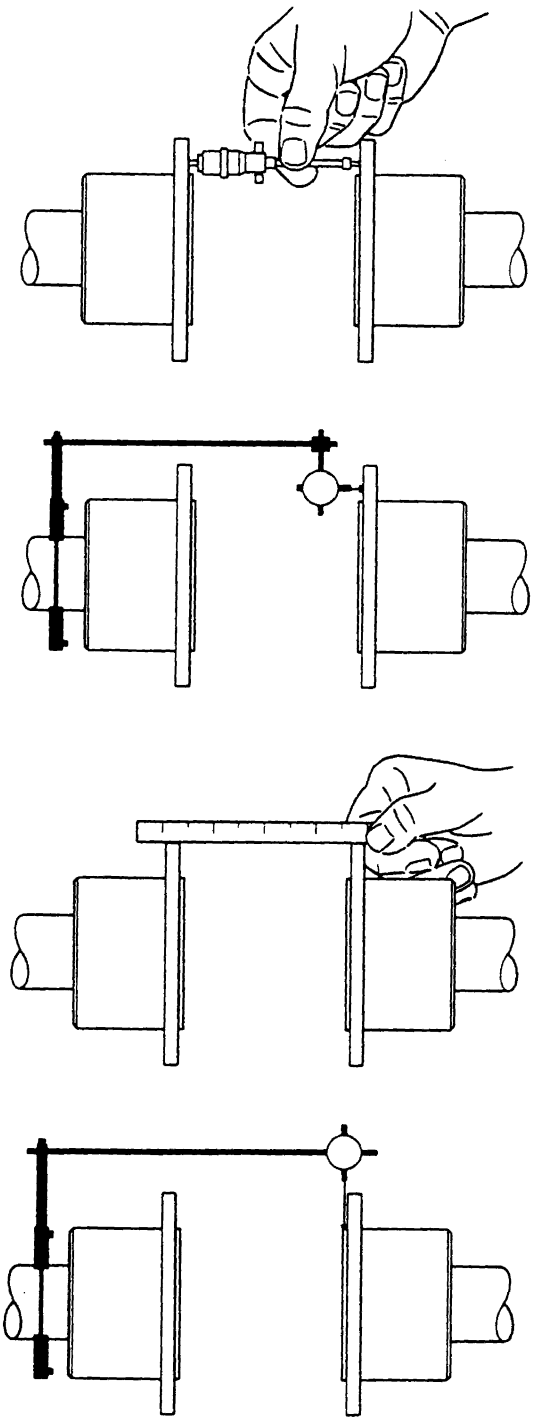

4. Degrease the hub bore and shaft seat.
5. Insert shaft or slide hub over the shaft.
6. Tighten all locking screws gradually and all the way around (not in diametrically opposite sequence; see Figure 6–7).

Several passes are required until all screws are torqued to specified tightening torque of 42 ft.–lbs. (57 Nm). Check tightening torque (42 ft.–lbs. [57 Nm]) with a torque wrench. Both collars must remain in equal distance.

REMOVAL
Shrink disc removal procedure is similar to installation.

1. Gradually release locking screws all the way around. Initially each screw should be released about a quarter of a turn only. Thus tilting and jamming of collars will be avoided. **DO NOT** remove locking screws.
2. Remove shaft or pull hub from the shaft. Any rust formed on shaft in front of hub must first be removed.
3. Pull shrink disc from hub.

CLEANING AND LUBRICATION
Removed shrink discs need not to be taken apart or lubricated prior to reinstallation. Only a dirty shrink disc should be cleaned and lubricated.

For the tapered surfaces, one of the following lubricants should be used:

TABLE 2– LUBRICATION

LUBRICANT (MoS2)	TYPE
Molykote 321 R (lube coat)	Spray
Molykote Spray (powder spray)	Spray
Molykote G Rapid Aemason MO 19 P	Spray or Paste
DIO–setral 57 N (lube coat)	Spray or Paste
Locking screws are lubricated with a multipurpose grease such as Molykote BR 2 or similar. Damaged o–rings must be replaced.	

MOTOR CONNECTION INSTRUCTIONS

1. Once a year while the equipment is disconnected from the power source and locked out for maintenance, remove the cover to the motor conduit box.
2. Inspect the rubber boots' or connections' insulating materials covering the motor connections for signs of thermal damage.
3. If boots or insulating material remain pliable and there is no sign of damage, connections are satisfactory.
4. If boot or insulating material show distress as mentioned above, then investigate to determine the source of thermal damage and repair the connection as necessary.
5. Replace the damaged boot(s) with new boot(s) as required or retape connections per National, State or Local codes.
6. Replace the conduit cover prior to reconnecting the power source.

⚠ WARNING

Electrical shock hazard. Disconnect all power at the source before attempting maintenance.

6.8 TROUBLESHOOTING INTRODUCTION

The following information has been compiled from operational experience with your package. It identifies symptoms and diagnosis of SEVERAL probable difficulties, but NOT ALL of those possible.

The systematic collection of operational data cannot be over–emphasized, as it may give evidence of the presence (or not) of a fault before it turns into a serious breakdown – for example, the vibrations signature increase of a damaged bearing, or the efficiency decrease of a dirty heat exchanger.

A detailed visual inspection is worth performing for almost all problems and may avoid unnecessary additional damage to the compressor. Always remember to:

1. Check for loose wiring.
2. Check for damaged piping.
3. Check for parts damaged by heat or an electrical short circuit, usually apparent by discoloration or a burnt odor.

Should your problem persist after making the recommended check, consult your nearest Sullair representative or the Sullair Corporation.

6.9 TROUBLESHOOTING GUIDE

SYMPTOM	PROBABLE CAUSE	REMEDY
COMPRESSOR WILL NOT START	Main Disconnect Switch Open	Close switch.
	Line Fuse Blown	Replace fuse.
	Control Transformer Fuse Blown	Replace fuse.
	Motor Starter Overloads Tripped	Reset. Should trouble persist, check whether motor starter contacts are functioning properly.

6.9 TROUBLESHOOTING (CONTINUED)

SYMPTOM	PROBABLE CAUSE	REMEDY
COMPRESSOR WILL NOT START (CONT.)	Supervisor Panel Fuse is Blown	Replace fuse.
	Low Incoming Line Voltage	Check voltage. Should voltage check low, consult power company.
		Replace Supervisor controller if no display or erratic display.
COMPRESSOR SHUTS DOWN WITH AIR DEMAND PRESENT	Loss of Control Voltage	Reset. If trouble persists, check that line pressure does not exceed maximum operating pressure of the compressor (specified on nameplate).
	Low Incoming Voltage	Consult power company. The Sullair Supervisor will provide indication of most maintenance problems if control power has not been lost. Shutdowns will occur upon a faulty condition or a bad sender condition.
	Excessive Operating Pressure	Check maximum P2 pressure setting.
		"High Press P1" display; Max P1 pressure may be set too low. Consult factory for recalibration.
		Defective solenoid valve; solenoid valve should cause control lever to move to unload stop when the pressure switch contacts open. Repair if defective.
		Defective blowdown valve; blowdown valve should exhaust sump pressure to 40 to 50 psig (2.8 bar to 3.4 bar) when maximum operating pressure is reached. Repair if defective.
		Open or shorted P1, P2, P3 or P4 sender message; replace sender indicated.
		Cooling air flow restricted; clean cooler and check for proper ventilation.
		Ambient temperature is too high; provide sufficient ventilation.
		Low fluid level; add fluid.
		Clogged filter; change the fluid filter element as indicated by Supervisor control.
		Thermal valve not functioning properly; replace element (air–cooled only).
		Water flow regulating valve not functioning properly; change (water–cooled only).
		Open or shorted T1 or T2 sender; check for a short or open circuit to probe and correct wiring.
	Low Fluid Pressure ("Low Pressure P3" display)	Check fluid level.
PRESSURE RELIEF VALVE OPENS REPEATEDLY	Defective Pressure Relief Valve	Replace pressure relief valve. Check Separator Differential (plugged) ΔP1.
LIQUID WATER IN COMPRESSED AIR LINES	Water Vapor Condensation From Cooling and Compression Occurs Naturally	Remove the water vapor from compressed air prior to distribution through the air system. Check operation of aftercooler and moisture separator. Install a compressed air dryer sized for the flow and dryness level required. (Note: Filters may also be required to remove particulates, liquid oil aerosols or for oil vapor removal. Change cartridges as recommended by the filter manufacturer.) Check all drain traps routinely to insure their proper operation. Maintain them regularly.

7.1 PROCEDURE FOR ORDERING PARTS

Parts should be ordered from the nearest Sullair Representative or the Representative from whom the compressor was purchased. If for any reason parts cannot be obtained in this manner, contact the factory directly at the addresses, phone or fax numbers below.

When ordering parts always indicate the **Serial Number** of the compressor. This can be obtained from the Bill of Lading for the compressor or from the Serial Number Plate located on the compressor.

SULLAIR ASIA, LTD.
Sullair Road, No. 1
Chiwan, Shekou
Shenzhen, Guangdong PRV.
PRC POST CODE 518068
Telephone: 755-6851686
Fax: 755-6853473

SULLAIR EUROPE, S.A.
Zone Des Granges BP 82
42602 Montbrison Cedex, France
Telephone: 33-477968470
Fax: 33-477968499

SULLAIR CORPORATION
3700 East Michigan Boulevard
Michigan City, Indiana 46360 U.S.A.
Telephone: 1-219-879-5451
Fax: (219) 874-1273
Fax: (219) 874-1835 (Parts)
Fax: (219) 874-1288 (Service)

7.2 RECOMMENDED SPARE PARTS LIST

DESCRIPTION	KIT NUMBER	QUANTITY
repair kit for fluid stop valve 016742	**001684**	**1**
repair kit for thermal valve 041299	**001084**	**1**
element for separator with gaskets 250034–123 (primary)	**250034–124**	**1**
element for separator with gaskets 250034–129 (secondary)	**250034–130**	**1**
repair kit for regulator valve 406929	**041742**	**1**
repair kit for blowdown valve 409783	**001667**	**1**
repair kit for Sullicon Control 011682–003	**250020–353**	**1**
repair kit for control line filter 02250112–032	**02250112–031 (element/seal)**	**1**
	02250115–960 (float asm/seal)	**1**
repair kit for fluid return strainer 241771	**241772**	**1**
element for 18” diameter air filter 250006–718 (primary)	**250007–838**	**1**
element for 18” diameter air filter 250006–718 (secondary)	**250007–839**	**1**
replacement kit for fluid filter 250007–219	**250008–956**	**1**
repair kit for solenoid valve 250038–668	**250038–673 (valve)**	**1**
	250031–738 (coil)	**1**
repair kit for solenoid valve 250038–755	**250038–676 (valve)**	**1**
	250038–730 (coil)	**1**
repair kit for regulator 408275	**250028–693**	**1**
repair kit for minimum pressure/check valve 250033–821	**250018–262**	**1**
Sullube fluid (5 gallons)	**250022–669**	**1**
Sullube fluid (55 gallons)	**250022–670**	**1**
repair kit for combination trap w/heater separator 250004–597	**250033–036**	**1**
repair kit for shaft seal	**600893–001**	**1**
repair kit (diaphragm) for air cylinder 250016–183	**608311–001**	**1**

PLEASE NOTE: WHEN ORDERING PARTS, INDICATE SERIAL NUMBER OF COMPRESSOR

7.3 MOTOR, COMPRESSOR, FRAME AND PARTS

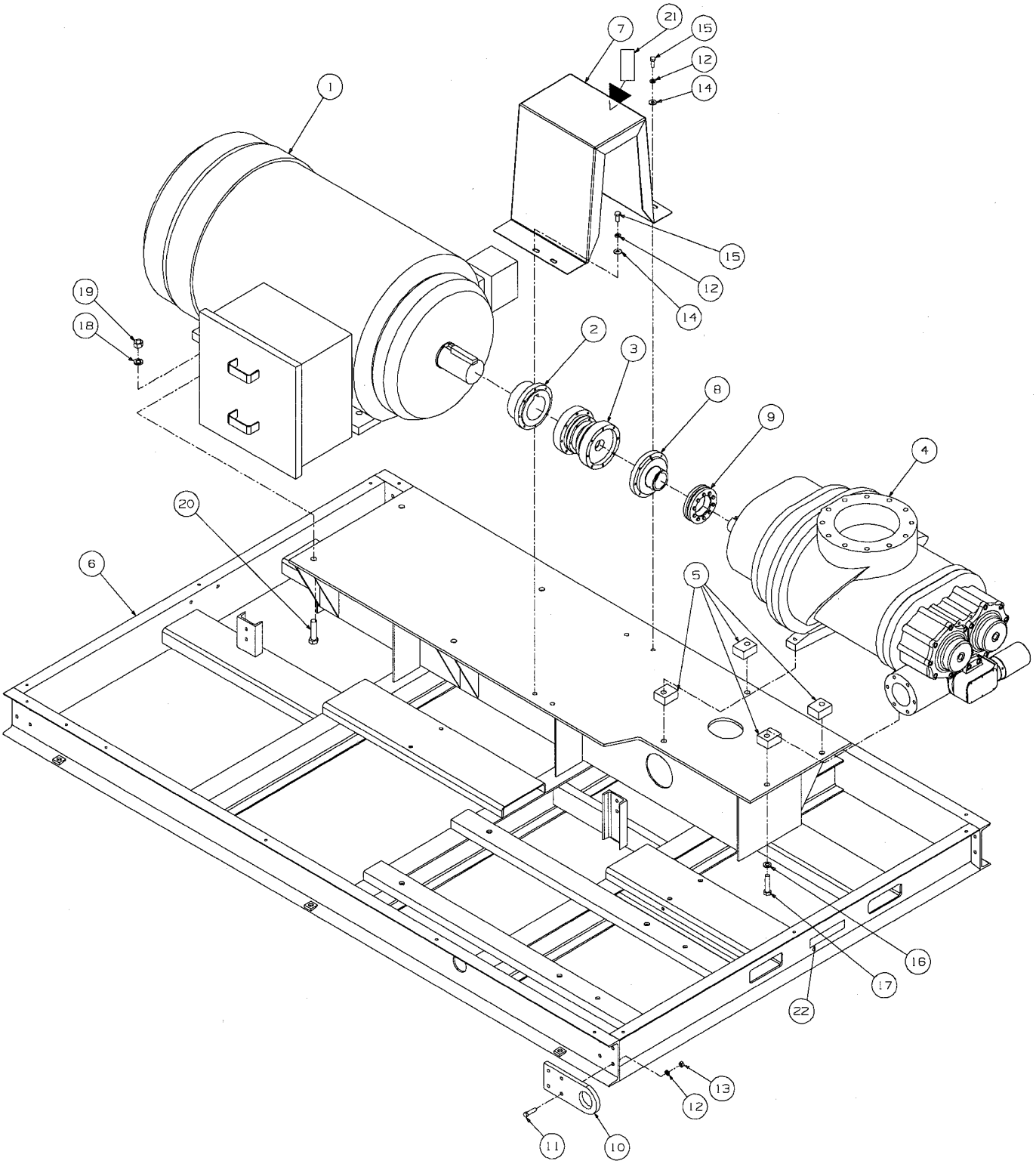

02250126–798R0

7.3 MOTOR, COMPRESSOR, FRAME AND PARTS

key number	*description*	*part number*	*quantity*
1	motor,300 horsepower 6600/50 4p tepe	02250121–804	1
2	hub, coupling 4.125” bore falk #340	02250125–813	1
3	kit,disk pack & spacer falk340	02250125–811	1
4	unit,compr dxr25	**(I)**	1
5	block, compr supp 25s	250025–569	4
6	frame,ls25s–300a spcl extended	02250122–294	1
7	guard, coupling ls25s–300 spcl	02250125–821	1
8	hub, coupling 2.75” bore falk #340	02250125–812	1
9	hub,shrink disc 90mm ls25s **(II)**	02250126–841	1
10	lug,lifting 25 series	250008–361	4
11	capscr, hex gr5 1/2–13 x 2	829108–200	16
12	washer, spr lock reg pltd 1/2	837808–125	20
13	nut,hex pltd 1/2–13	825208–448	16
14	washer, pl–b reg pltd 1/2	838208–112	4
15	capscr, hex gr5 1/2–13 x 1 1/4	829108–125	4
16	washer, spr lock reg pltd 3/4	837812–188	4
17	capscr, hex gr5 3/4–10 x 3	829112–300	4
18	washer, spr lock reg pltd 7/8	837814–219	4
19	nut,hex pltd 7/8–9	825214–776	4
20	capscr, hex gr5 7/8–9 x 3 1/2	829114–350	4
21	sign, warning sever–fan port	049965	1
22	decal, fork lifting	241814	2

(I) There is an exchange program whereby a remanufactured compressor unit can be obtained from Sullair distributors or the factory at less cost than the owner could repair the unit. For information regarding the unit exchange program, contact your nearest Sullair representative or the Sullair Corporation.

The shaft seal is not considered part of the compressor unit in regard to the two year warranty. The normal Sullair parts warranty applies. For shaft seal repairs consult factory.

(II) For maintenance on coupling no. 02250125–811 use kit 02250127–781.

PLEASE NOTE: WHEN ORDERING PARTS, INDICATE SERIAL NUMBER OF COMPRESSOR

7.4 COMPRESSOR AIR INTAKE SYSTEM

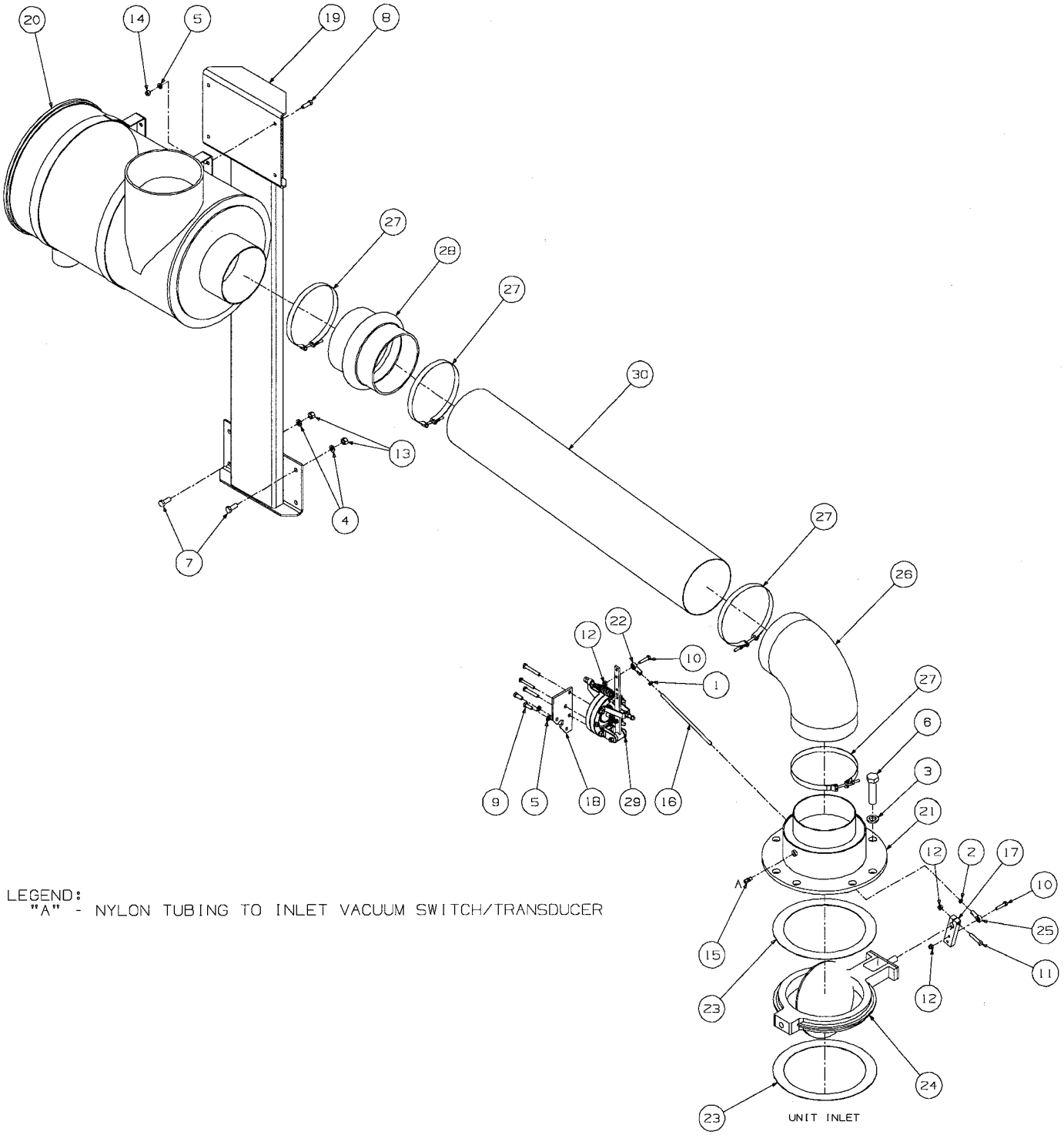

02250126–797R0

7.4 COMPRESSOR AIR INTAKE SYSTEM

key number	*description*	*part number*	*quantity*
1	nut, hex jam rh pltd 5/16–24	868205–195	1
2	nut, hex jam lh pltd 5/16–24	866605–195	1
3	washer, spr lock reg pltd 7/8	837814–219	8
4	washer, spr lock reg pltd 1/2	837808–125	4
5	washer, spr lock reg pltd 3/8	837806–094	6
6	capscr, hex gr5 7/8–9 x 3 1/2	829114–350	8
7	capscr, hex gr5 1/2–13 x 1 1/4	829108–125	4
8	capscr, hex gr5 3/8–16 x 1 1/4	829106–125	4
9	capscr, hex gr5 3/8–16 x 1	829106–100	2
10	capscr, hex gr5 5/16–18 x 1 1/2	829105–150	2
11	capscr, hex gr5 5/16–18 x 1 3/4	828605–175	1
12	nut,hex f pltd 5/16–18	825305–283	3
13	nut,hex pltd 1/2–13	825208–448	4
14	nut,hex pltd 3/8–16	825206–337	4
15	connector, tube–m 1/4 x 1/8	813604–125	1
16	rod,link 5/16–24 x 9–1/2	021287	1
17	lever, inl vlv(3/4”shft)adj	250019–036	1
18	bracket, sullicon ctl 255	250007–789	1
19	support, 18” hd air filter	250007–788	1
20	filter, 18” dia air **(I)**	250006–718	1
21	adapter, inlet 10” to 8”	250003–378	1
22	rod end, spherical rh 5/16	040136	1
23	gasket, .06 x 10.5id x 13.25od	041079	2
24	valve, butterfly 10”	041110	1
25	rod end, spheical lh 5/16	042004	1
26	elbow, air inlet 90 rubber	043406	1
27	clamp, hose 8”	043598	4
28	hose, hump 8 x 8”	044733	1
29	control,sullicon less brkt **(II)**	011682–003	1
30	duct,8”od x .06w x 48”	02250124–151	1

(I) For maintenance on air filter 250006–718, order primary replacement element no. 250007–838, and secondary replacement element no. 250007–839.

(II) For maintenance on Sullicon Control, order repair kit no. 250020–353.

PLEASE NOTE: WHEN ORDERING PARTS, INDICATE SERIAL NUMBER OF COMPRESSOR

7.5 FLUID COOLING PIPING SYSTEM – AIR–COOLED REMOTE COOLER

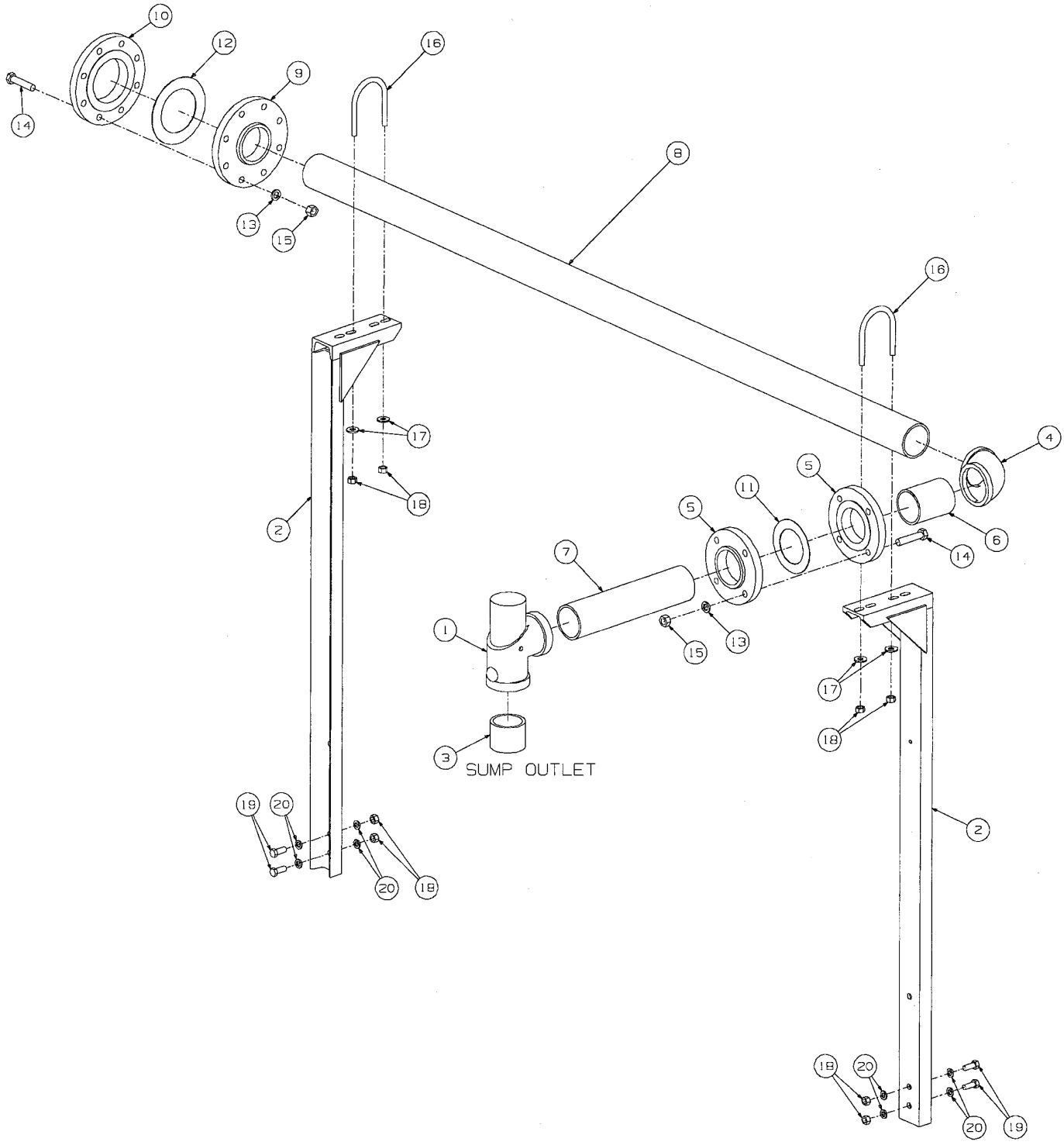

02250126–800R0

7.5 FLUID COOLING PIPING SYSTEM – AIR–COOLED REMOTE COOLER

key number	*description*	*part number*	*quantity*
1	valve, min press check 3” (spl) **(I)**	250033–821	1
2	support, 3” pipe	250007–791	2
3	nipple,pipe–xs plt 3 x cl	866448–000	1
4	elbow, pipe 90 deg plt 3”	866215–120	1
5	flange, thrd 3” 150# rf	819315–048	2
6	nipple,pipe pltd 3 x 4 1/2	866348–045	1
7	nipple,pipe pltd 3 x 15	866348–150	1
8	nipple,pipe pltd 3 x 89 1/2	866348–895	1
9	flange, thrd red 3 x 9”	819548–090	1
10	flange, thrd 4” 150# rf	819315–064	1
11	gasket, asa flange 150# 3”	240621–008	1
12	gasket, asa flange 150# 4”	240621–010	1
13	washer, spr lock reg pltd 5/8	837810–156	12
14	capscr, hex gr5 5/8–11 x 3	829110–300	12
15	nut,hex pltd 5/8–11	825210–559	12
16	u–bolt,1/2” x 3” pipe pltd	868308–300	2
17	washer, pl–b reg pltd 1/2	838208–112	4
18	nut,hex pltd 1/2–13	825208–448	8
19	capscr, hex gr5 1/2–13 x 1 1/4	829108–125	4
20	washer, spr lock reg pltd 1/2	837808–125	8

(I) For maintenance on minumum pressure valve no. 250033–821, order repair kit no. 250018–262.

PLEASE NOTE: WHEN ORDERING PARTS, INDICATE SERIAL NUMBER OF COMPRESSOR

7.6 FLUID COOLING SYSTEM- AIR–COOLED REMOTE COOLER

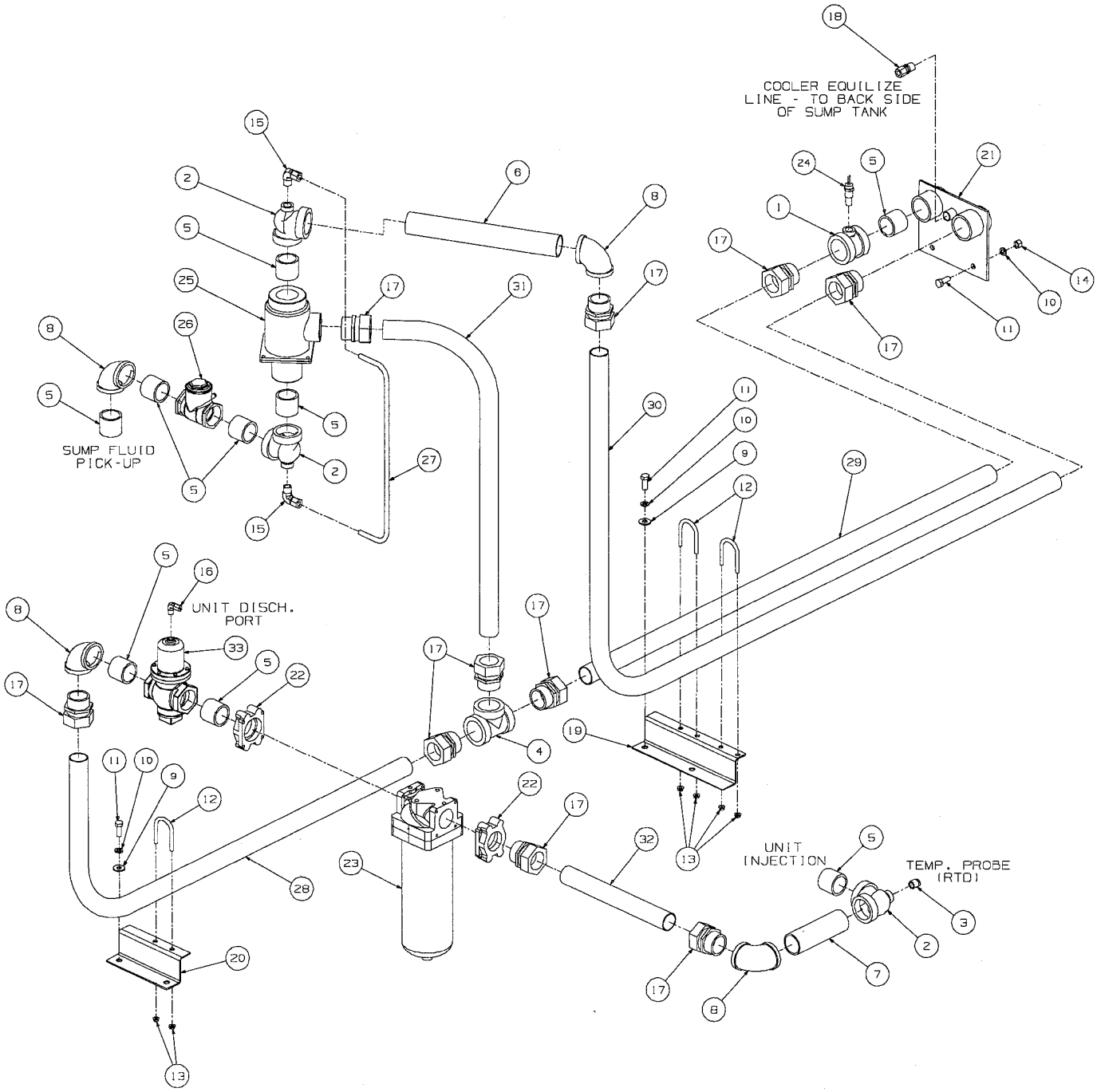

02250126–801R0

7.6 FLUID COOLING SYSTEM- AIR–COOLED REMOTE COOLER

key number	*description*	*part number*	*quantity*
1	tee, reducing pltd 2 x 2 x 1/2	867508–082	1
2	tee, reducing pltd 2 x 1/2 x 2	867508–028	3
3	bushing,red pltd 1/2 x 1/8	867102–005	1
4	tee, pipe 150# plt 2	866815–080	1
5	nipple,pipe–xs plt 2 x cl	866432–000	9
6	nipple,pipe pltd 2 x 17	866332–170	1
7	nipple,pipe pltd 2 x 7 1/2	866332–075	1
8	elbow, pipe 90 deg plt 2”	866215–080	4
9	washer, pl–b reg pltd 1/2	838208–112	4
10	washer, spr lock reg pltd 1/2	837808–125	6
11	capscr, hex gr5 1/2–13 x 1 1/4	829108–125	6
12	u–bolt,3/8” x 1 1/2” pipe	829006–150	3
13	nut,hex f pltd 5/16–18	825305–283	6
14	nut,hex pltd 1/2–13	825208–448	2
15	elbow, tube 90 deg m 1/2 x 1/2	810508–050	2
16	elbow, tube 90 deg m 1/4 x 1/4	810504–025	1
17	connector, tube–m 2 x 2	810232–200	10
18	connector, tube–m 1/2 x 1/2	810208–050	1
19	bracket, dual tube support	250010–896	1
20	bracket, sing tube support	250010–895	1
21	bracket, oil connection 2”npt	250007–794	1
22	adapter, port 2”npt	250007–220	2
23	filter, fluid **(I)**	250007–219	1
24	switch, temp n.o. 115f	043239	1
25	valve,thermal 170 2” npt **(II)**	041299	1
26	valve, check–swing 2” npt	040671	1
27	tube, thermal vlv bypass ls25s spcl	02250127–003	1
28	tube,osv/fltr inl ls25s spcl	02250126–997	1
29	tube, cooler oil inl ls25s spcl	02250126–995	1
30	tube, thermal vlv out ls25s spcl	02250126–993	1
31	tube, thermal vlv b–pass ls25s	02250126–991	1
32	tube,fltr/unit inj ls25s spcl	02250126–989	1
33	valve, fluid stop ci 2”npt **(III)**	016742	1

(I) For maintenance on moisture trap no. 250004–596, order repair kit no. 250033–036.

(II) For maintenance on thermal valve no. 041299, order repair kit no. 001084.

(III) For maintenance on fluid stop valve no. 016742, order repair kit no. 001684.

PLEASE NOTE: WHEN ORDERING PARTS, INDICATE SERIAL NUMBER OF COMPRESSOR

7.7 FLUID COOLING SYSTEM – AIR – COOLED REMOTE (LOW NOISE)

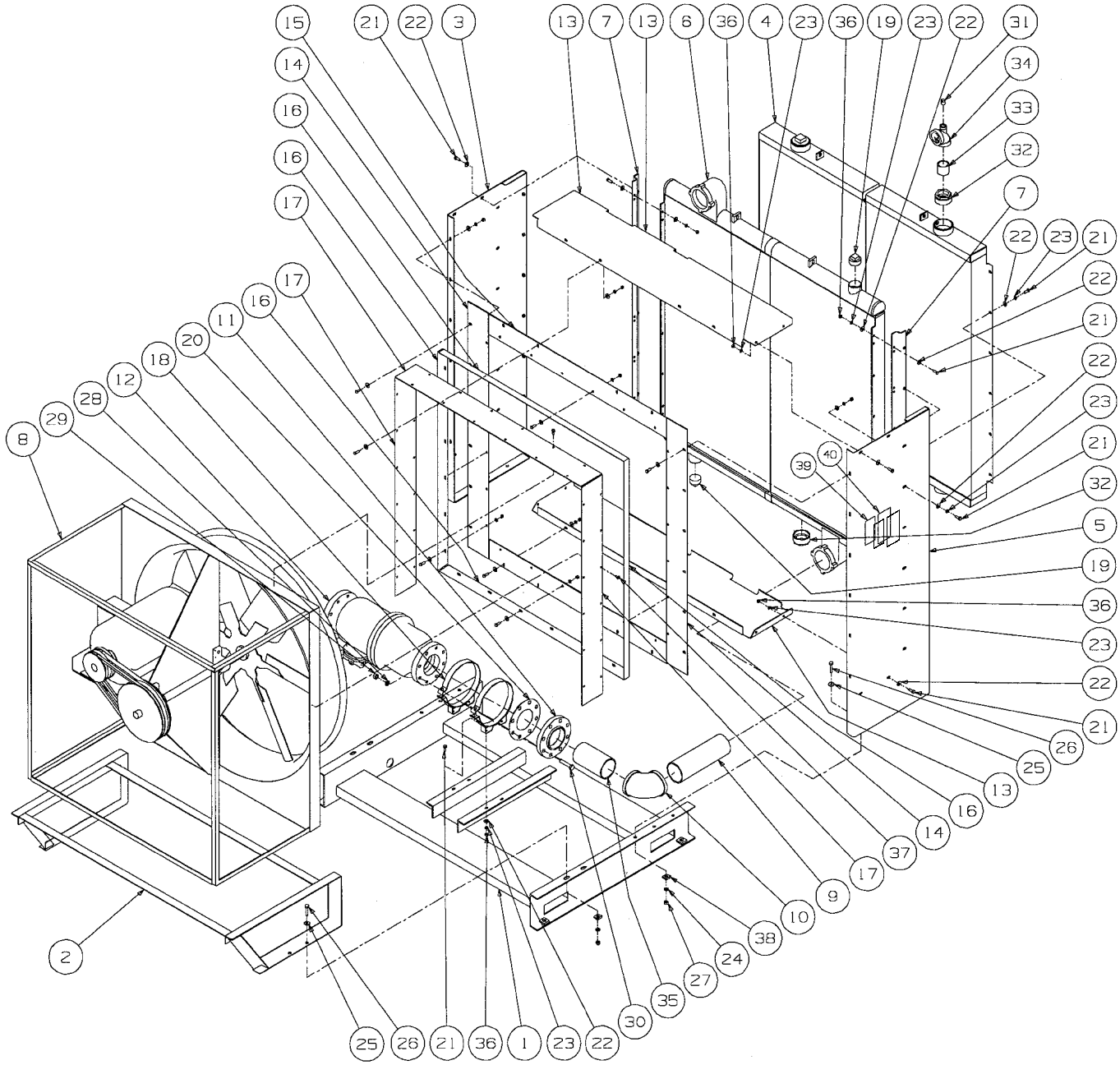

02250127 – 327R0

7.7 FLUID COOLING SYSTEM– AIR–COOLED REMOTE (LOW NOISE)

key number	*description*	*part number*	*quantity*
1	frame, ac base 32–300/450	250000–454	1
2	support, assy–rem clr fan	250032–391	1
3	panel, left hand 32–300/450	250000–468	1
4	core, cooler 64 x 62 ie–2995	250007–856	1
5	panel, right side 32–300/450	250000–472	1
6	core,aft cl modine ie–2475	049984	1
7	bracket, ac 32–400	250000–475	2
8	fan,48”ln asy 400v >250hp l/m	02250122–269	1
9	nipple,pipe–galv 4 x 14	823164–140	1
10	elbow, pipe 90 deg 4”	803515–160	1
11	flange, thrd 4” 125# ff	818312–064	1
12	separator, w/trap 31lsth 4”flg **(I)**	250004–597	1
13	panel, top & btm 32–300/450	250000–474	2
14	strip,rem fan assy adapter	250032–363	2
15	strip,rem fan assy adapter	250032–364	2
16	angle, 1 1/2 x 1 1/2 x 1/8	250032–362	4
17	strip,rem fan assy spacer	250032–365	3
18	band, 9”–air filter	049104	2
19	plug, pipe 2” 3000# stl plt	866900–080	2
20	gasket, 4” 125# flg full face	242437–010	1
21	capscr, hex gr5 3/8–16 x 1	829106–100	92
22	washer, pl–b reg pltd 3/8	838206–071	12
23	washer, spr lock reg pltd 3/8	837806–094	92
24	washer, spr lock reg pltd 1/2	837808–125	10
25	washer, pl–b reg pltd 1/2	838208–112	10
26	capscr, hex gr8 1/2–13 x 2	827908–200	10
27	nut,hex pltd 1/2–13	825208–448	10
28	washer, spr lock reg pltd 5/8	837810–156	8
29	nut,hex pltd 5/8–11	825210–559	8
30	capscr, hex gr5 5/8–11 x 3	829110–300	8
31	plug, pipe 1/2” 3000# stl	807800–020	1
32	bushing,red hx 3 x 2	802112–080	2
33	nipple,pipe–xs plt 2 x cl	866432–000	1
34	tee,reducing 2 x 1/2 x 2	802208–028	1
35	nipple,pipe pltd 4 x 8	866364–080	1
36	nut,hex pltd 3/8–16	825206–337	68
37	screw, tc–hex 5/16–18 x 3/4	834205–075	48
38	washer, bevel 1/2	837008–125	10
39	sign, warning sever – fan	049855	1
40	sign, warning sever–fan port	049965	1

(I) For maintenance on trap separator no. 250004–597, order repair kit no. 250033–036.

PLEASE NOTE: WHEN ORDERING PARTS, INDICATE SERIAL NUMBER OF COMPRESSOR

7.8 COMPRESSOR DISCHARGE SYSTEM

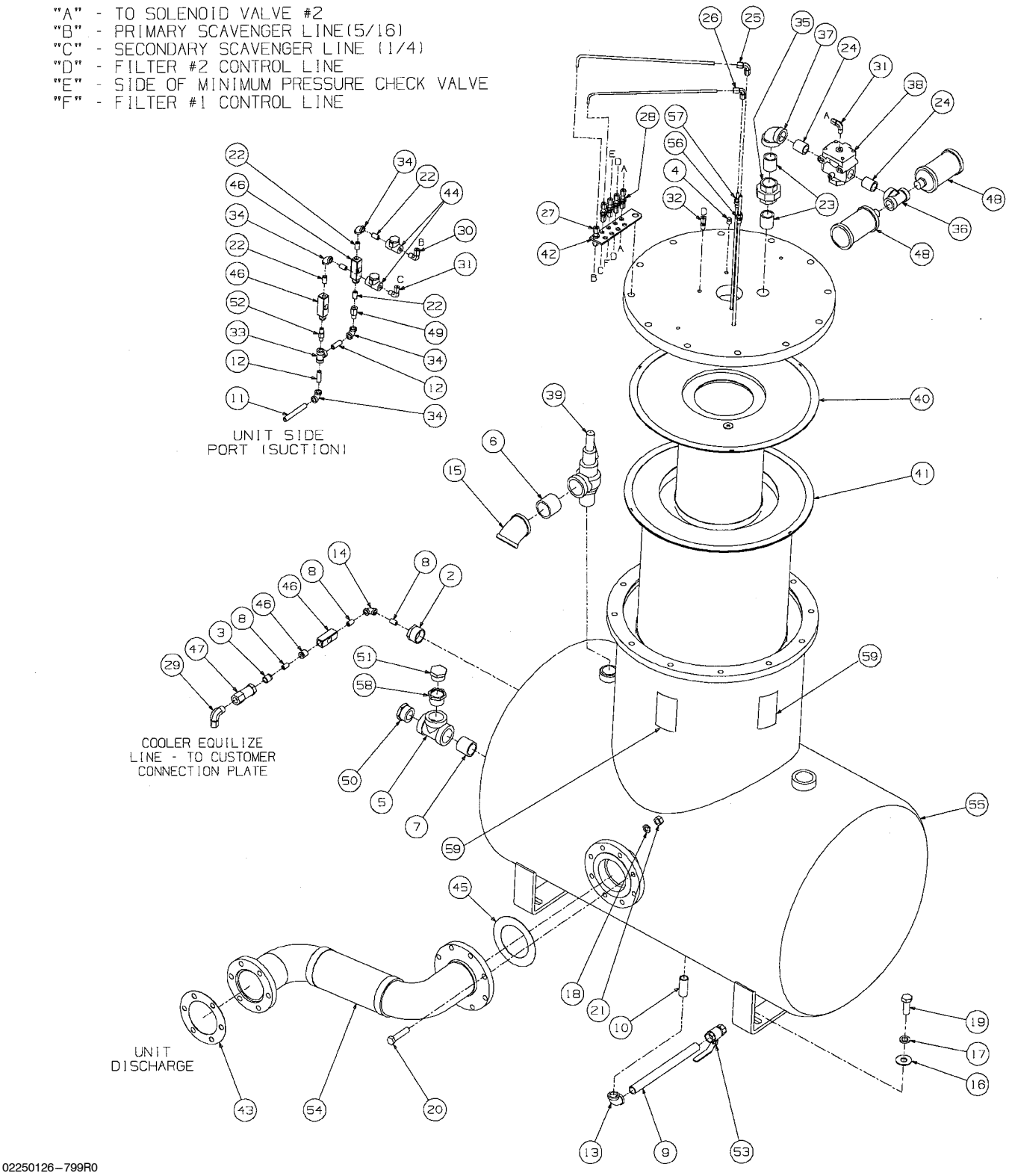

02250126–799R0

7.8 COMPRESSOR DISCHARGE SYSTEM

key number	description	part number	quantity
1	plug, pipe 1 1/2” 150# plt	868815–060	1
2	bushing,red pltd 1 1/2 x 1/4	867106–010	1
3	bushing,red pltd 1/2 x 1/4	867102–010	1
4	plug, pipe 1/4” 3000# stl plt	866900–010	1
5	tee, pipe 150# plt 1 1/2	866815–060	1
6	nipple,pipe–xs plt 2 x cl	866432–000	1
7	nipple,pipe–xs plt 1 1/2 x cl	866424–000	1
8	nipple,pipe–xs plt 1/4 x cl	866404–000	3
9	nipple,pipe pltd 3/4 x 12 1/2	866312–125	1
10	nipple,pipe pltd 3/4 x 2 1/2	866312–025	1
11	nipple,pipe pltd 1/4 x 4	866304–040	1
12	nipple,pipe pltd 1/4 x 1 1/2	866304–015	2
13	elbow, pipe 90 deg plt 3/4”	866215–030	1
14	elbow, pipe 90 deg plt 1/4”	866215–010	1
15	elbow, pipe 45 deg plt 2”	866115–080	1
16	washer, pl–b reg pltd 3/4	838212–112	4
17	washer, spr lock reg pltd 3/4	837812–188	4
18	washer, spr lock reg pltd 5/8	837810–156	8
19	capscr, hex gr5 3/4–10 x 2	829112–200	4
20	capscr, hex gr5 5/8–11 x 3	829110–300	8
21	nut,hex pltd 5/8–11	825210–559	8
22	nipple,pipe–xs galv 1/4 x cl	823204–000	5
23	nip; xs 1 1/4 x cls	822220–000	2
24	nipple,pipe–xs 1 x cl	822216–000	2
25	elbow, tube union 5/16	811205–031	1
26	elbow, tube union 1/4	811204–025	1
27	union, tube bhd 5/16”	811104–031	1
28	union, tube bhd 1/4”	811104–025	4
29	elbow, tube 90 deg m 1/2 x 1/2	810508–050	1
30	elbow, tube 90 deg m 5/16 x 1/4	810505–025	1
31	elbow, tube 90 deg m 1/4 x 1/4	810504–025	2
32	connector, tube–m 1/4 x 1/4	810204–025	1
33	tee, pipe galvanized 1/4	804415–010	1
34	elbow, pipe 90 deg 1/4”	803515–010	4
35	union, pipe–brs seat 1 1/4 150#	802515–050	1
36	tee,reducing 3/4 x 3/4 x 1	802203–034	1
37	elbow, red 1 1/4 x 1 150#	801605–040	1

(Continued on page 51)

PLEASE NOTE: WHEN ORDERING PARTS, INDICATE SERIAL NUMBER OF COMPRESSOR

7.8 COMPRESSOR DISCHARGE SYSTEM

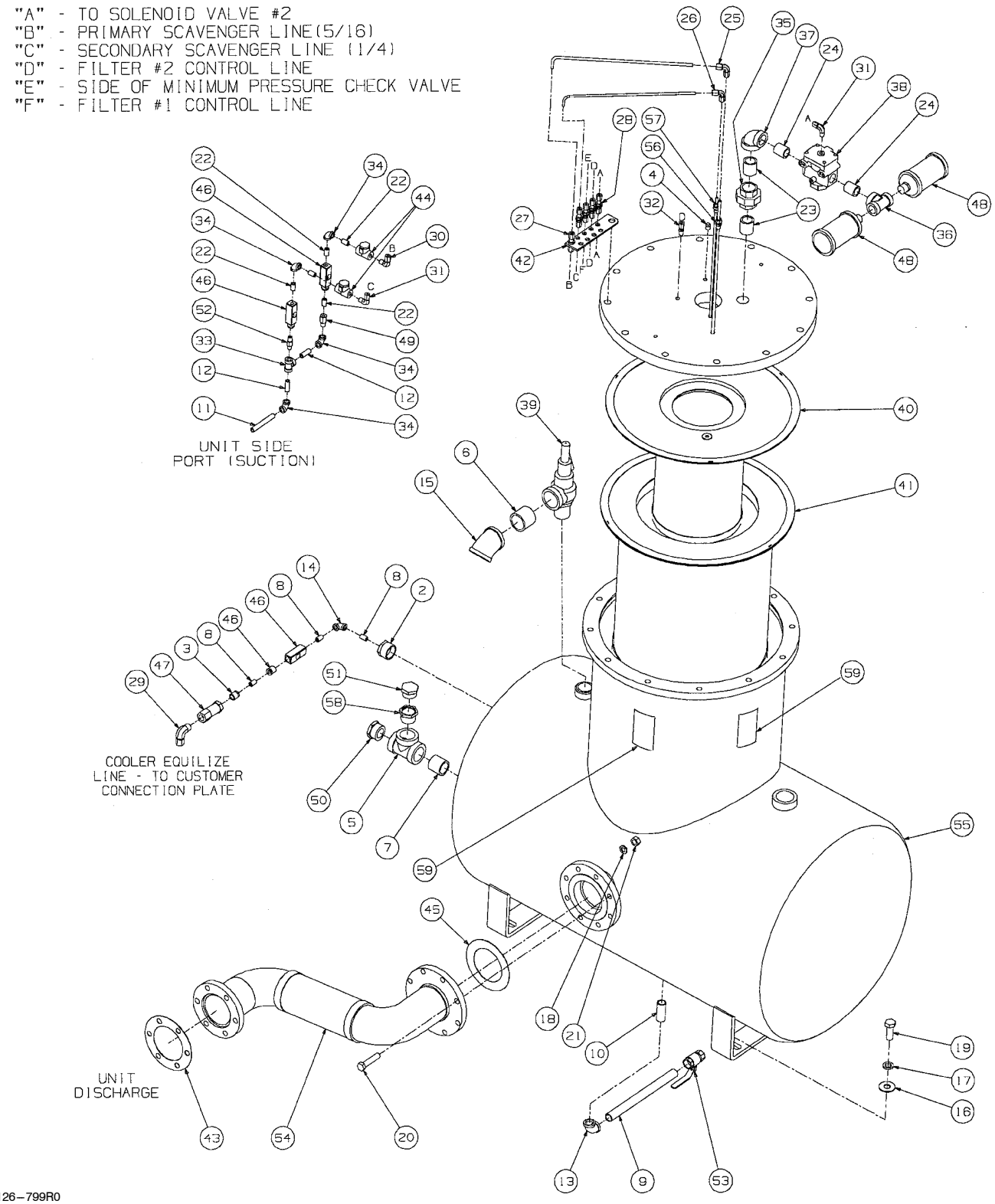

02250126–799R0

7.8 COMPRESSOR DISCHARGE SYSTEM (CONTINUED)

key number	*description*	*part number*	*quantity*
38	valve, blwdwn 1”nc 2way #c6654 **(I)**	409783	1
39	valve, relief 1–1/2 150 psi	407003	1
40	element, sep/sec **(II)**	250034–129	1
41	element, sep/pri **(III)**	250034–123	1
42	bracket, tubing manifold	250014–757	1
43	gasket, discharge flange 4” n.p.t.	250002–379	1
44	strainer, v–type 300psix1/4 **(IV)**	241771	2
45	gasket, asa flange 150# 4”	240621–010	1
46	glass, sight 24kt	046559	3
47	check valve, 1/2”	042694	1
48	silencer, air 3/4”	040758	2
49	orifice, restrictor 1/32	040381	1
50	glass, oil level sight 1–1/2”	040279	1
51	plug,o–ring boss sae 1 1/4	040029	1
52	orifice, .062” x .25m x .25m nptf	027443	1
53	valve, ball 3/4” npt apollo	02250117–792	1
54	joint, expansion disch/tnk ls25s ac/wc	02250116–346	1
55	tank, oil separator 30” dia. 150# fl	02250114–256	1
56	fitting, flex – 5/16 x 1/4mpt	020501	1
57	connector, flex 1/4t x 1/4p	020169	1
58	filler adapter	020044	1
59	sign, warning–hot surfaces	407408	3

(I) For maintenance blowdown valve no. 409783, order repair kit no. 001667.

(II) For maintenance on separator element (secondary) no. 250034–129, order repair kit no. 250034–130.

(III) For maintenance on separator element (primary) no. 250034–123, order repair kit no. 250034–124.

(IV) For maintenance on strainer no. 241771, order repair kit no. 241772.

PLEASE NOTE: WHEN ORDERING PARTS, INDICATE SERIAL NUMBER OF COMPRESSOR

7.9 SULLICON CONTROL

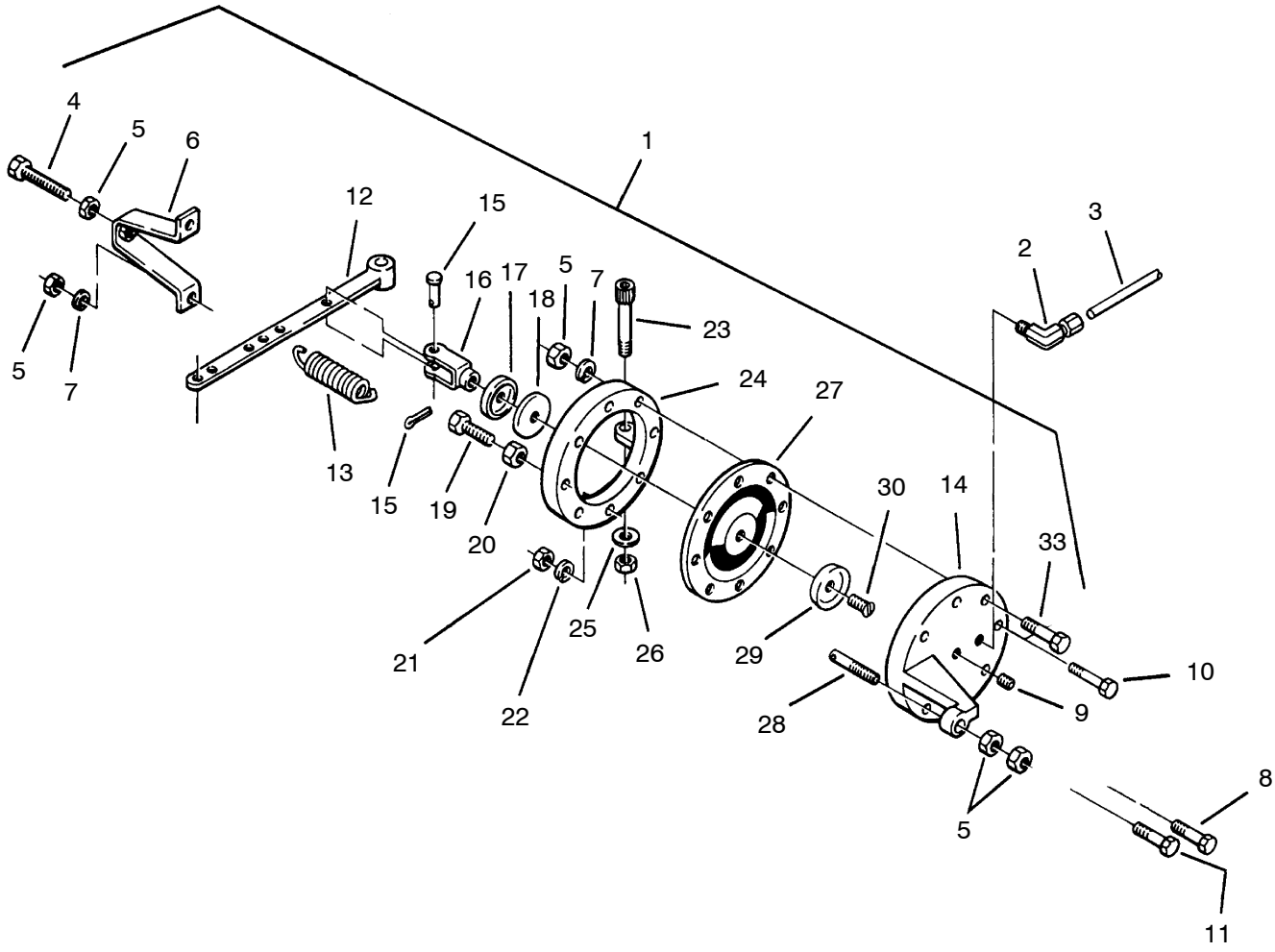

7.9 SULLICON CONTROL

key number	description	part number	quantity
1	control, Sullicon **(I)**	011682–003	1
2	elbow, tube–m 1/4” x 1/4”	810504–025	12
3	tubing, steel 1/4”	841115–004	62 ft.
4	capscrew, hex head 3/8”–16 x 2 1/4”	828606–225	1
5	nut, hex unfinished 3/8”–16	824206–337	7
6	bracket, control stop	020864	1
7	washer, springlock regular 3/8”	837506–094	8
8	capscrew, hex gr5 1/2”–13 x 1 1/4”	828608–125	2
9	plug, pipe 1/4” 3000#	807800–010	1
10	capscrew, hex gr5 5/16”–18 x 2 1/2”	828605–250	3
11	capscrew, hex gr5 3/8”–16 x 2 1/2”	828606–250	4
12	lever, control	011084	1
13	spring, control light 3 7/8”	250006–526	1
14	cover, control	021654	1
15	pin, yoke 1/4” with cotter pin	040065	1
16	yoke, rod end 1/4”–28	040138	1
17	plunger	020094	1
18	seal, cup	042538	1
19	screw, hex unmachined 5/16”–24 x 2”	831105–200	1
20	nut, hex jam unfinished 5/16”–24 –right hand	824605–195	1
21	nut, hex unfinished 5/16”–18	824205–273	1
22	washer, springlock regular 5/16”	837506–200	1
23	screw, machine shoulder 3/8” x 2”	830506–200	1
24	body, control	021635	1
25	washer, regular 3/8”	838206–071	1
26	nut, hex locking plated 5/16”–18	825505–166	1
27	diaphragm, Sullicon	250020–028	1
28	bolt, adjustable Sullicon spring	250009–134	1
29	washer, back–up	021172	1
30	screw, sealing 1/4”–28 x 3/4”	041264	1

(I) For maintenance on Sullicon Control no. 011682–003, order repair kit no. 250020–353.

PLEASE NOTE: WHEN ORDERING PARTS, INDICATE SERIAL NUMBER OF COMPRESSOR

7.10 COMPRESSOR ACTUATOR

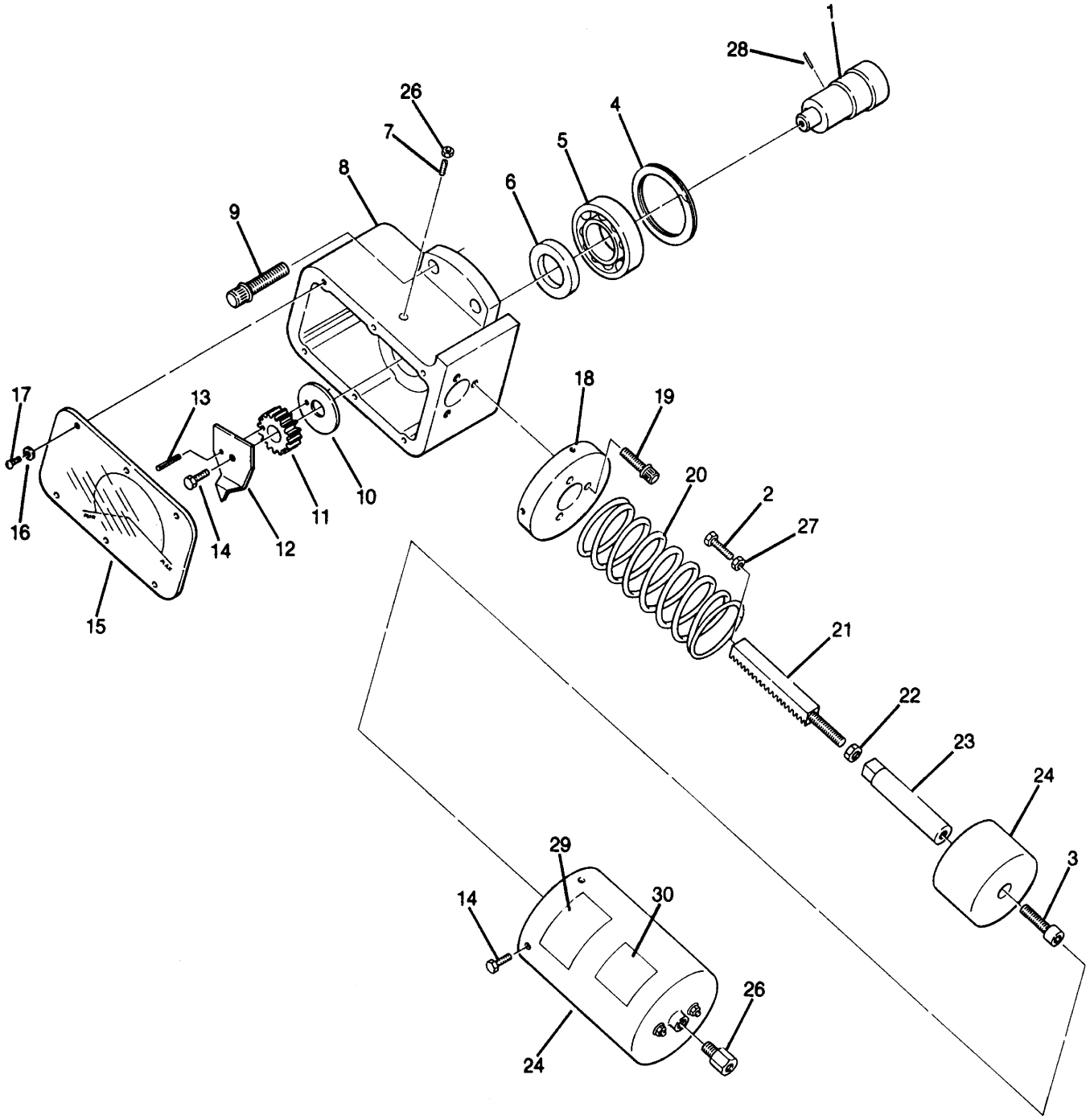

7.10 COMPRESSOR ACTUATOR

key number	*description*	*part number*	*quantity*
1	shaft, indicator	250030–979	1
2	screw, machine hex 1/4”–20 x 1 3/4”	830104–175	1
3	capscrew, socket 3/8”–16 x 1”	828906–100	1
4	ring, retaining Viton	826502–236	1
5	bearing, ball	499002–207	1
6	seal, lip	250016–200	1
7	set, screw 1/2”–13 x 1.62	250024–465	1
8	base, air cylinder	250016–725	1
9	capscrew, ferry head 1/2”–13 x 2 3/4”	828408–275	3
10	guide, rack	250016–199	1
11	gear, pinion	250016–196	1
12	indicator, actuator	250030–983	1
13	pin, roll	827404–100	1
14	capscrew, hex head gr8 1/4”–20 x 1/2”	828204–050	4
15	cover, adapter	250021–510	1
16	washer, regular #18	838201–045	6
17	screw, machine rod #8–32 x 1/2”	831601–050	6
18	mount, air cylinder	250016–188	1
19	capscrew, ferry head 5/16”–18 x 1 1/4”	828404–125	3
20	spring, seal 2 1/4”	250016–394	1
21	rack, gear	250016–197	1
22	nut, hex jam 3/8”–16	824906–227	1
23	shaft, air cylinder	250016–194	1
24	cylinder, air **(I)**	250016–183	1
25	orifice, .062 x .25m x .25f	028831	1
26	nut, hex unfinished 1/2”–13	824208–448	1
27	nut, hex jam 1/4”–20	824904–164	1
28	pin, roll unfinished 1/8” x 1/2”	827402–050	1
29	decal, warning actuator	250029–836	1
30	decal, actuator valve positioning	250029–784	1

(I) For maintenance on air cylinder no. 250016–183, order diaphragm repair kit no. 608311–001.

PLEASE NOTE: WHEN ORDERING PARTS, INDICATE SERIAL NUMBER OF COMPRESSOR

7.11 ELECTRO–PNEUMATIC CONTROL SYSTEM

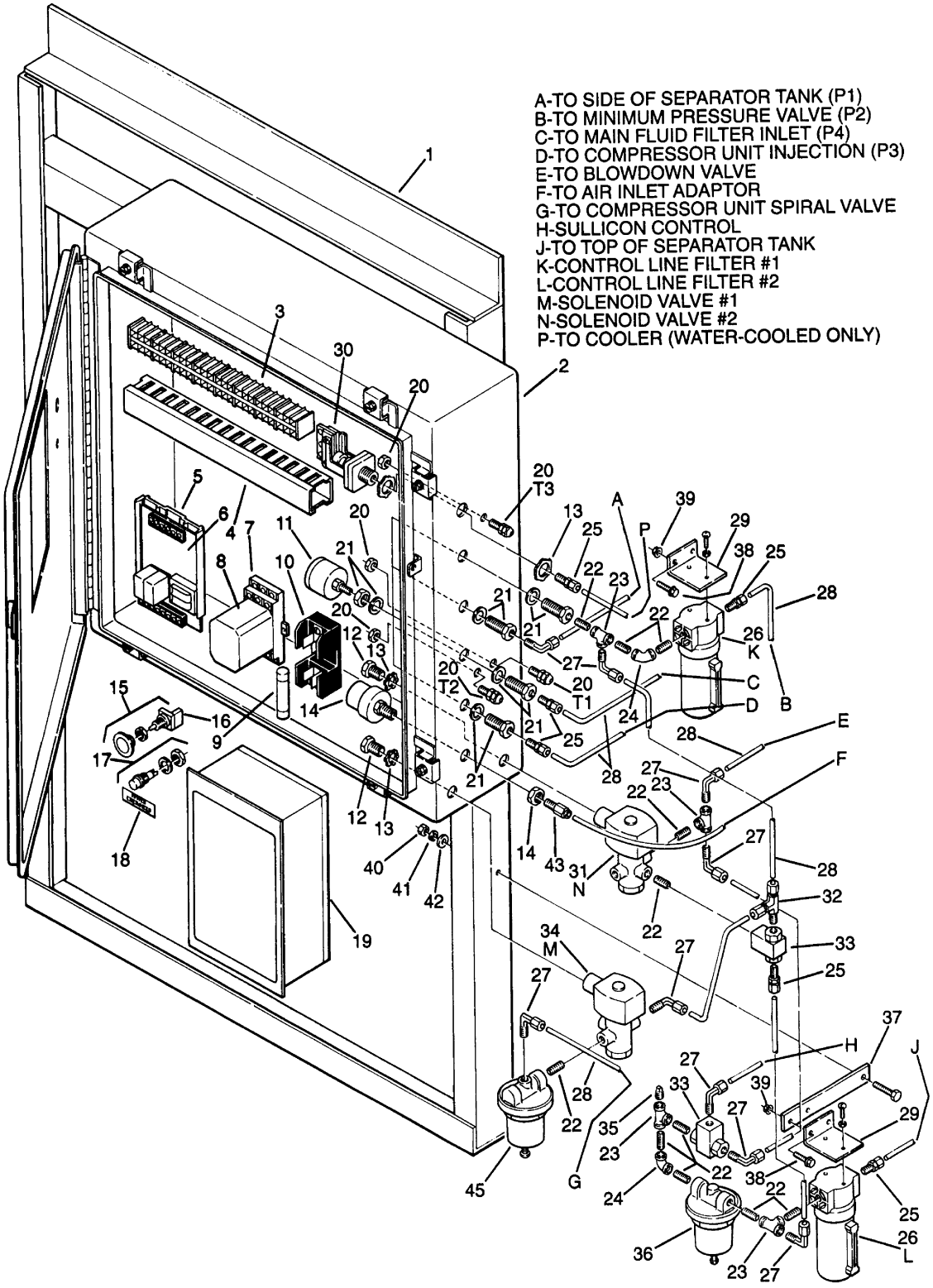

7.11 ELECTRO–PNEUMATIC CONTROL SYSTEM

key number	*description*	*part number*	*quantity*
1	frame, control box support	02250103–086	1
2	box, control	02250104–633	1
3	block, terminal and track	041493	9
4	panduit	047322	1
5	track, snap mounting	250024–522	1
6	control, temperature dual	250039–911	1
7	pin, socket for 120V plug–in relay	045497	1
8	relay, control 120V 10A 3PDT	045496	1
9	fuse, non 5	241957	1
10	fuseholder	041147	1
11	transducer, pressure	02250078–933	4
12	nipple, chase – conduit 1/2”	847815–050	2
13	locknut, conduit 1/2”	847200–050	11
14	switch, vacuum 22” wc	02250078–249	1
15	switch, emergency stop	02250085–504	1
16	block, control – normally closed	250027–125	1
17	light, power energized	250000–105	1
18	decal, power energized	249554–049	1
19	control, supervisor micro cntrlr	02250071–231	1
20	cord, grip	250023–496	3
21	bulkhead pipe 1/8”	841500–002	4
22	nipple, pipe 1/4” x close	822204–000	12
23	tee, pipe 1/4”	804415–010	5
24	elbow, pipe 90_ x 1/4”	801515–010	2
25	connector, tube–m 1/4” x 1/4”	810204–025	9
26	filter, control line air 1/4” **(I)**	02250112–032	2
27	elbow, tube–m 1/4” x 1/4”	810504–025	5
28	tubing, steel 1/4”	841015–004	62 ft.
29	angle, pressure switch	230452	1
30	switch, water pressure (w/c only)	043428	1
31	valve, solenoid 1/4” 3–way 115V **(II)**	250038–668	1
32	tee, tube 1/4”	810904–025	1
33	valve, shuttle	408893	2

(Continued on page 59)

(I) For maintenance on control air filter no. 02250112–032, order element/seal kit no. 02250112–031, and float assembly/seal kit no. 02250115–960.

(II) For maintenance on solenoid valve no. 250038–668, order repair kit no. 250038–673 (valve), and repair kit no. 250031–738 (coil).

PLEASE NOTE: WHEN ORDERING PARTS, INDICATE SERIAL NUMBER OF COMPRESSOR

7.11 ELECTRO–PNEUMATIC CONTROL SYSTEM

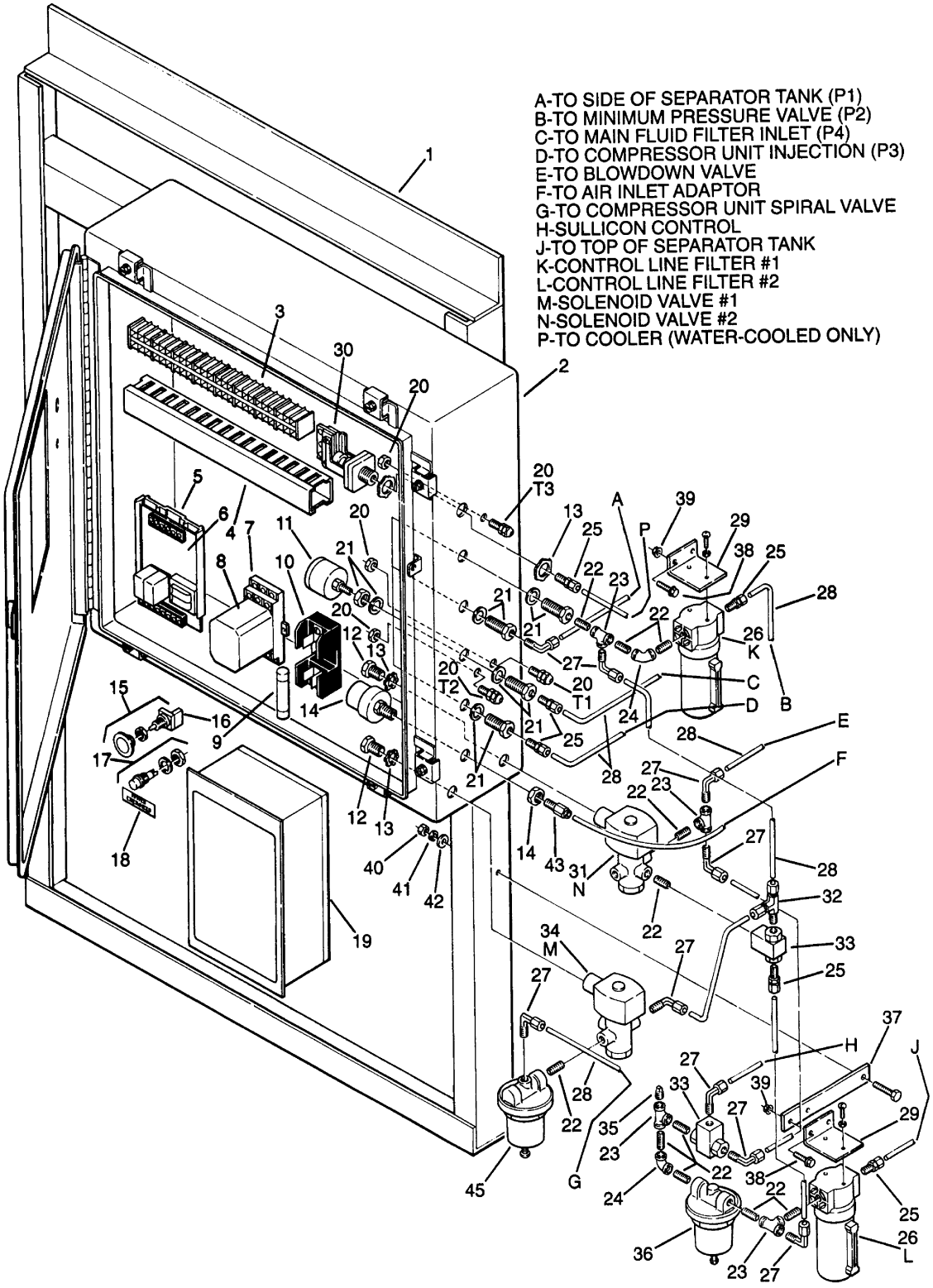

7.11 ELECTRO–PNEUMATIC CONTROL SYSTEM (CONTINUED)

key number	*description*	*part number*	*quantity*
34	valve, solenoid 1/4” 3–way 115V **(III)**	250038–755	1
35	plug, pipe 1/4”	807800–010	2
36	valve, differential pressure regulator **(IV)**	406929	1
37	bracket, fluid stop valve	231584	1
38	screw, hex serrated washer 5/16” x 3/4”	829705–075	2
39	nut, hex plated 5/16”	824815–005	2
40	nut, hex unfinished 1/2”–13	824208–448	1
41	washer, springlock regular 1/2”	837508–125	1
42	washer, pl–b regular unfinished 1/2”	837308–112	1
43	connector, tube–m 1/4” x 1/8”	813604–125	1
44	tubing plastic 1/4”	250024–745	16 ft.
45	valve, differential pressure regulator (spiral valve) **(V)**	408275	1

(III) For maintenance on solenoid valve no. 250038–755 orer repair kit no. 250038–676 (valve) and repair kit no. 250038–730 (coil).

(IV) For maintenance on differential pressure regulator valve no. 406929, order repair kit no. 041742.

(V) For maintenance on differential pressure regulator valve no. 408275, order repair kit no. 250028–693.

PLEASE NOTE: WHEN ORDERING PARTS, INDICATE SERIAL NUMBER OF COMPRESSOR

7.12 ENCLOSURE

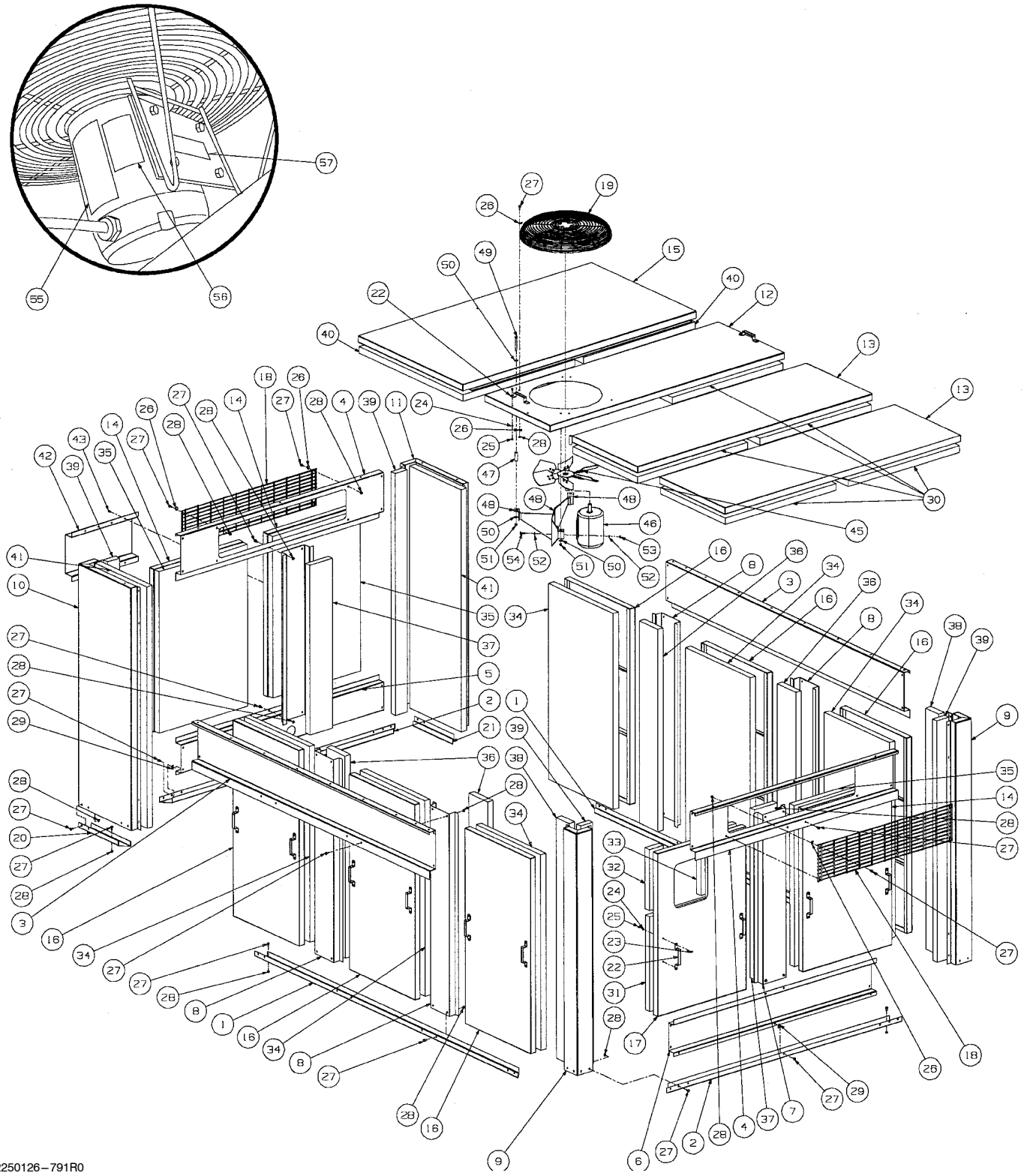

02250126–791R0

7.12 ENCLOSURE

key number	description	part number	quantity
1	channel, side sill t532 encl.	250007–119	2
2	channel, end sill	250007–121	2
3	panel, side header	250007–115	2
4	panel, end header	250007–126	2
5	panel, btm end lub/wat con 25s	250019–885	1
6	panel, bottom end	250007–122	1
7	support, end enclosure	250007–124	2
8	support, side 8 5/8	250007–118	4
9	post,corner 6”	250007–117	2
10	post, corner ls25s spcl lh	02250124–152	1
11	post, corner ls25s spcl rh	02250124–153	1
12	panel, roof 30 x 87”	250007–113	1
13	panel, roof 30 x 87	250007–112	2
14	panel, access	250007–123	3
15	roof,panel ls25s spcl	02250124–154	1
16	panel, access	014661	6
17	panel,acs33x50 super encl 32/25	02250058–224	1
18	grille, enclosure end	249651	2
19	guard, fan	041765	1
20	channel, bottom sill extension 25s rh	02250123–544	1
21	channel, bottom sill extension 25s lh	02250123–547	1
22	handle, canopy	042262	22
23	capscr, hex gr5 1/4–20 x 1/2	829104–050	44
24	washer, spr lock reg pltd 1/4	837804–062	44
25	nut,hex pltd 1/4–20	825204–226	44
26	clamp, wire	043194	16
27	screw, hex ser washer 5/16–18 x 3/4	829705–075	13
28	nut,hex f pltd 5/16–18	825305–283	98
29	nut,retainer u 5/16–18 .140	861505–140	32
30	panel, fib 29.50 x 41.00 x 2 m	047823–157	5
31	panel, fiberglass 2 x 32.5 x 29.00	02250058–140	1
32	panel, fiberglass 2 x 18.75 x 5.25	02250058–142	1
33	panel, fiberglass 2 x 18.75 x 13.25	02250058–143	1
34	panel, fib 29.50 x 60.00 x 2 m	047823–154	6
35	panel, fib 32.50 x 50.00 x 2 m	047823–158	3
36	panel, fib 8.50 x 62.00 x 2 m	047823–161	4

(Continued on page 63)

PLEASE NOTE: WHEN ORDERING PARTS, INDICATE SERIAL NUMBER OF COMPRESSOR

7.12 ENCLOSURE

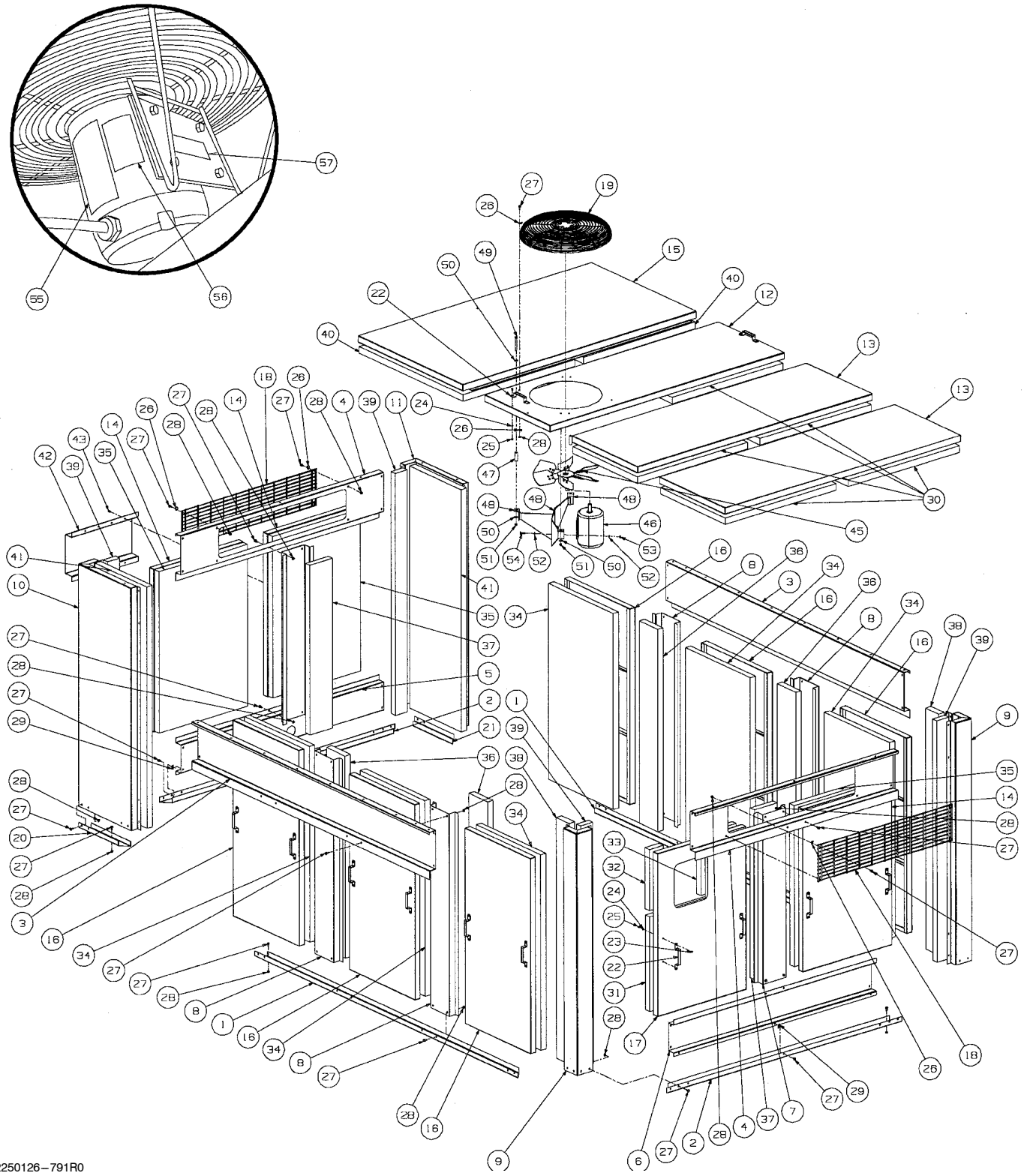

7.12 ENCLOSURE (CONTINUED)

key number	*description*	*part number*	*quantity*
37	panel, fib 8.50 x 52.00 x 2 m	047823–162	2
38	panel, fib 6.00 x 74.00 x 2 m	047823–179	2
39	panel, fib 4.50 x 74.00 x 2 m	047823–180	4
40	panel, fiberglass 2 x 47.5 x 41.5 mw	02250127–179	2
41	panel, fiberglass 2 x 74 x 26.5 mw	02250127–182	2
42	extension,canopy 20/16–200hp	02250054–357	1
43	screw, hex ser washer 1/4–20 x 1/2	829704–050	8
44	nut,hex f pltd 1/4–20	825304–236	8
45	fan, blower 20”–30 deg 185q8f	02250107–474	1
46	motor,.75hp 230/460/60 6p tepe	02250108–374	1
47	spacer, fan support	227267	3
48	support, fan motor	014613	1
49	capscr, hex gr5 3/8–16 x 4	829106–400	3
50	washer, pl–b reg pltd 3/8	838206–071	6
51	nut,hex locking 3/8–16	825506–198	3
52	washer, pl–b reg pltd 5/16	838205–071	8
53	nut,hex locking 5/16–18	825505–166	4
54	capscr, hex gr5 5/16–18 x 1 1/4	829105–125	4
55	sign, warning sever – fan	049855	2
56	decal, rotation	250021–564	1
57	sign, warning sever–fan port	049965	1

PLEASE NOTE: WHEN ORDERING PARTS, INDICATE SERIAL NUMBER OF COMPRESSOR

7.13 UNIT TUBING

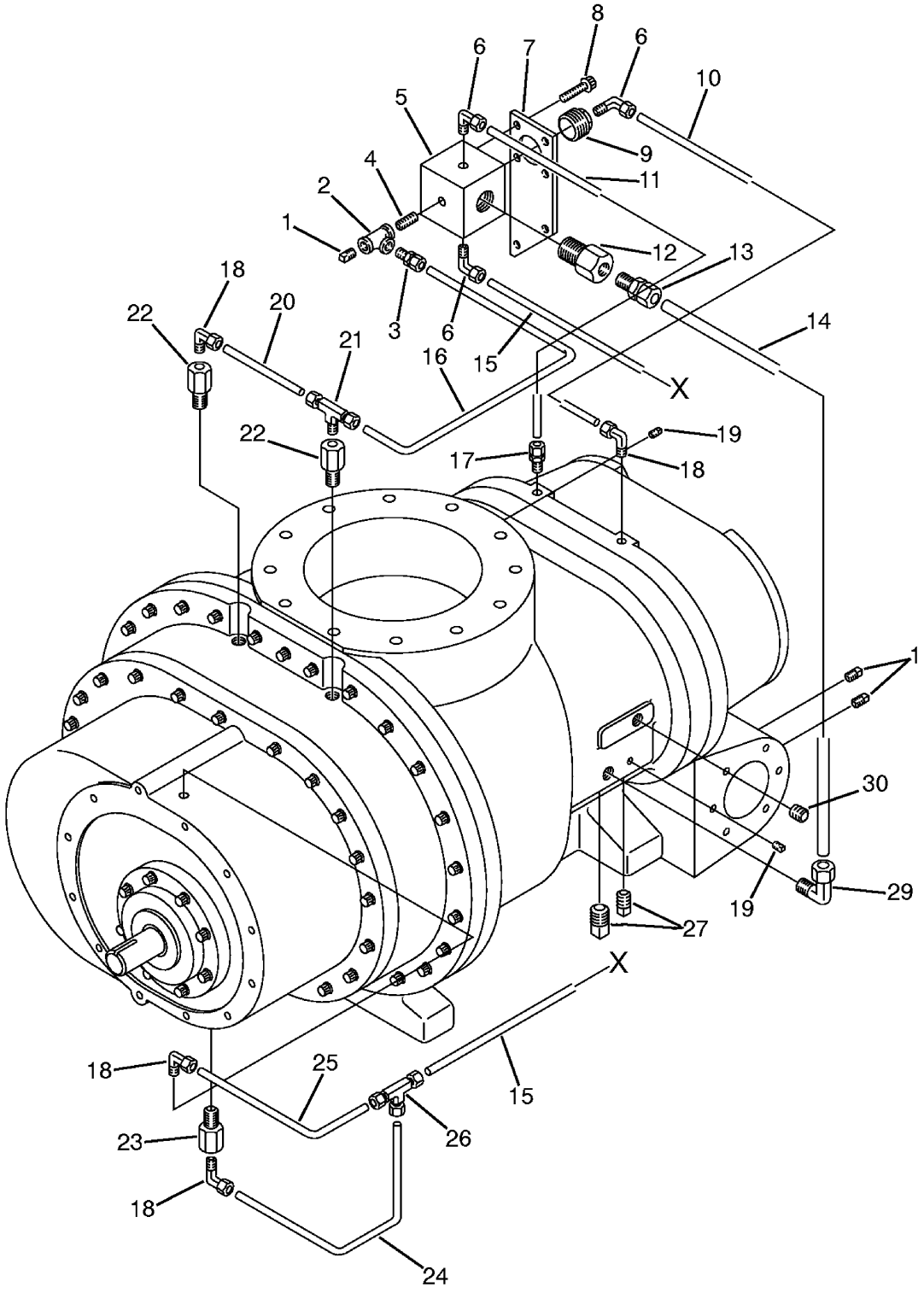

7.13 UNIT TUBING

key number	*description*	*part number*	*quantity*
1	plug, pipe 1/2”	807800–020	3
2	tee, pipe 1/2”	802415–020	1
3	connector, tube–M 1/2” x 1/2”	810208–050	1
4	nipple, pipe 1/2” x close	822208–000	1
5	manifold, 2” in x .5” out	250023–950	1
6	elbow, tube–M 1/2” x 1/2”	810508–050	3
7	bracket, manifold	250023–965	1
8	capscrew, hex GR8 3/8”–16 x 1”	828206–100	4
9	bushing, reducing hex 1 1/4” x 1/2”	802105–020	1
10	tube	250024–178	1
11	tube	250024–177	1
12	orifice, 1”M x 1”F x .562 **(I)**	250008–665	1
13	connector, tube–M 1” x 1”	810216–100	1
14	tube	250024–176	1
15	tube	250024–179	1
16	tube	250024–180	1
17	connector, tube–M 1/2” x 3/8”	810208–038	1
18	elbow, tube–M 1/2” x 3/8”	810508–038	4
19	plug, pipe 1/4”	807800–010	2
20	tube	250009–459	1
21	tee, tube–M 1/2” x 3/8”	810808–038	1
22	orifice, 3/8”m x 3/8”f x .094	250009–384	2
23	orifice, 3/8”M x 3/8”F x .375”	250009–460	1
24	tube	250009–456	1
25	tube	250009–455	1
26	tee, tube union 1/2”	811408–050	1
27	plug, pipe 1”	807800–040	1
28	plug, pipe 3/4”	807800–030	1
29	elbow, tube–F 1” x 1”	810416–100	1
30	plug, pipe hex socket 3/4”	499046–005	1

(I) This orifice can vary from 0.1562 to 0.625 depending on unit. Consult factory with serial number of your compressor.

PLEASE NOTE: WHEN ORDERING PARTS, INDICATE SERIAL NUMBER OF COMPRESSOR

7.14 DECAL GROUP

1

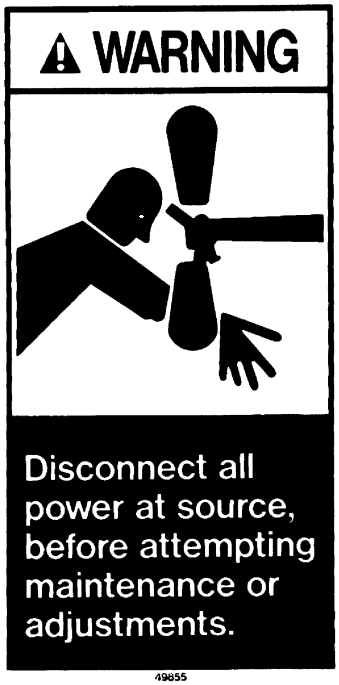

2

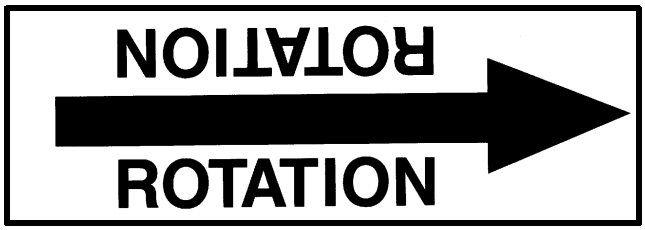

4

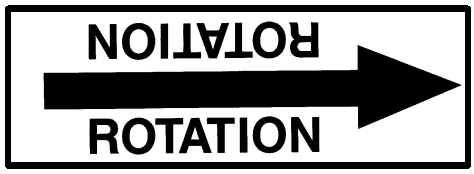

5

6

3

9

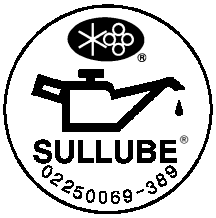

7

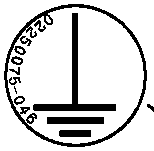

8

10

POWER
ENERGIZED

11

CAUTION: This machine is equipped with Automatic Stop / Start Control System.
DO NOT ATTEMPT to make any adjustment without disconnecting both main line and control circuit electrical power.
41065

12

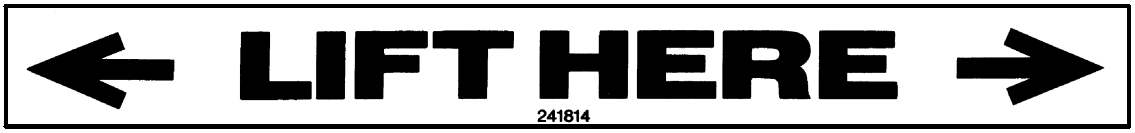

7.14 DECAL GROUP

key number	*description*	*part number*	*quantity*
1	sign, warning sever–fan port	049965	1
2	sign, warning sever – fan	049855	2
3	sign, air breathing (danger)	250027–935	1
4	decal, rotation	250021–564	1
5	decal, rotation	250021–286	1
6	decal, 460 volt **(I)**	02250069–399	1
7	decal, fluid Sullube **(II)**	02250069–389	1
8	decal, earth ground	02250075–046	1
9	sign, danger electrocution	049850	1
10	sign, power energized	249544–049	1
11	decal, autostart	041065	1
12	decal, fork lifting	241814	2

(Continued on page 69)

(I) Decal varies in accordance with machine voltage. For machines with voltage other than 460, consult factory for decal part number.

(II) This decal is used in conjuction with standard fill Sullube fluid. If your compressor contains an optional fill, consult factory to obtain the proper fluid decal part number. **DO NOT MIX FLUIDS.**

PLEASE NOTE: WHEN ORDERING PARTS, INDICATE SERIAL NUMBER OF COMPRESSOR

7.14 DECAL GROUP

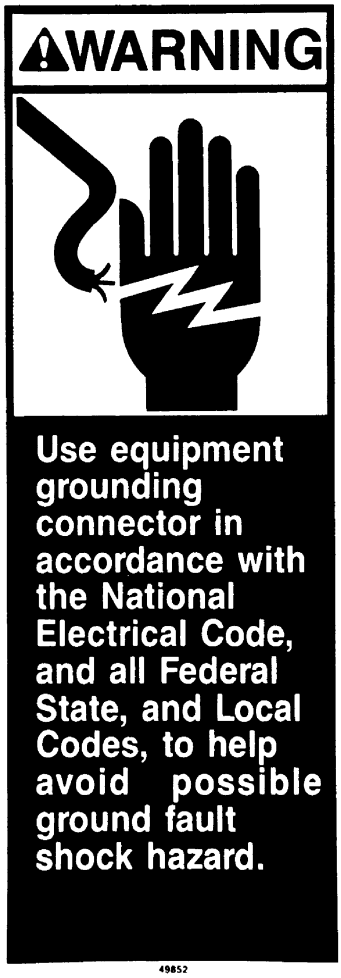

13

14

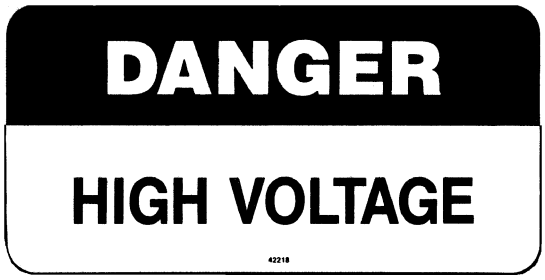

15

16

17

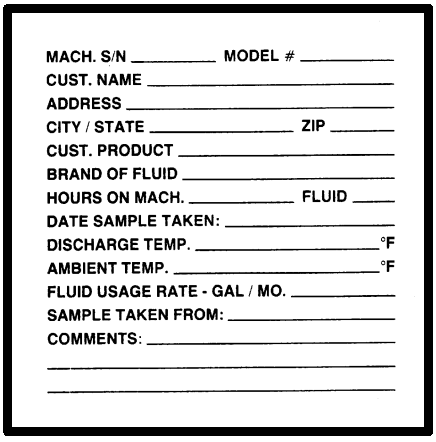

18

19

7.14 DECAL GROUP (CONTINUED)

key number	*description*	*part number*	*quantity*
13	sign, warning ground fault	049852	1
14	decal, warning actuator	250029–836	1
15	decal, danger high voltage	042218	1
16	decal, warning mixing fluids	02250110–891	1
17	decal, fluid sample	250022–675	1
18	decal, fluid stop valve P/N 016742	410239	1
19	decal, Sullair logo	02250059–048	2

(Continued on page 71)

PLEASE NOTE: WHEN ORDERING PARTS, INDICATE SERIAL NUMBER OF COMPRESSOR

7.14 DECAL GROUP

20

This product was manufactured to the highest quality standards in an ISO 9001 certified system.
Ce produit a été fabriqué selon les normes les plus strictes de qualité dans un système ISO 9001 certifié.
Dieses Produkt wurde In einem mit ISO 9001 Zertifikat versehenenSystem hergestellt und entspricht den höchsten Qualitäts normen.
Dette produkt er fremstillet i overensstemmelse med de strengeste kvalitetsnormer i et ISO 9001 - certificeret anlæg.

ISO 9001

Το προϊόν αυτό έχει κατασκευαστεί σύμφωνα με τις πλέον αυστηρές προδιαγραφές ποιότητας σε εγκατάσταση πιστοποιημένη με ISO 9001.
Dit produkt werd volgens de hoogste kwaliteitseisen geproduceerd in een ISO-9001 gecertificeerd kwaliteitssysteem.
Este producto ha sido fabricado según los más altos estándares de calidad en un sistema con la certificación ISO 9001.
Questo prodotto é stato fabbricato secondo i più alti standard qualitativi, in un sistema omologato ISO 9001.
本產品是由取得最高品管水准 ISO 9001資格之製造廠所生產

© Copyright 1998 Sullair Corporation. All Rights Reserved

21

FOR CHANGE IN FULL LOAD VALVE POSITION, REFER TO SULLAIR ENG. SPEC. #605912 (DXR25-K-11).

SULLAIR #250029-784 REV.# 1

22

WARNING

Do not permit air from this equipment to contact food stuff except in full compliance with FDA Standard 21CFR178.3570, and all other applicable federal, state and local, codes, standards and regulations.

250003-144

23

WARNING

Do not remove caps, plugs, or other components when compressor is running or pressurized.

Stop compressor and relieve all internal pressure before doing so.

40685

24

WARNING

This Unit Is Equipped With An Auto Start Sequence That Will Start The Unit In The Event Of A Power Failure Automatically After The Sump Pressure Drops To 10 PSIG And The Power Is Restored.

When Performing Maintenance Follow Your Company's Prescribed Safety Practices for Electrical Equipment.

250017-903

25

WARNING

Hot surfaces.

To avoid burns, keep hands and all parts of the body away.

407408

26

LS-25S

7.14 DECAL GROUP (CONTINUED)

key number	*description*	*part number*	*quantity*
20	decal, ISO 9001	02250057–624	1
21	decal, actuator valve positioning	250029–784	1
22	sign, warning “food grade” lube	250003–144	1
23	sign, warning “compressor fluid fill cap”	049685	1
24	decal, warning auto start	250017–903	1
25	sign, warning–hot surfaces	407408	3
26	decal, LS–25S	02250061–361	1

PLEASE NOTE: WHEN ORDERING PARTS, INDICATE SERIAL NUMBER OF COMPRESSOR

7.15 DECAL LOCATIONS

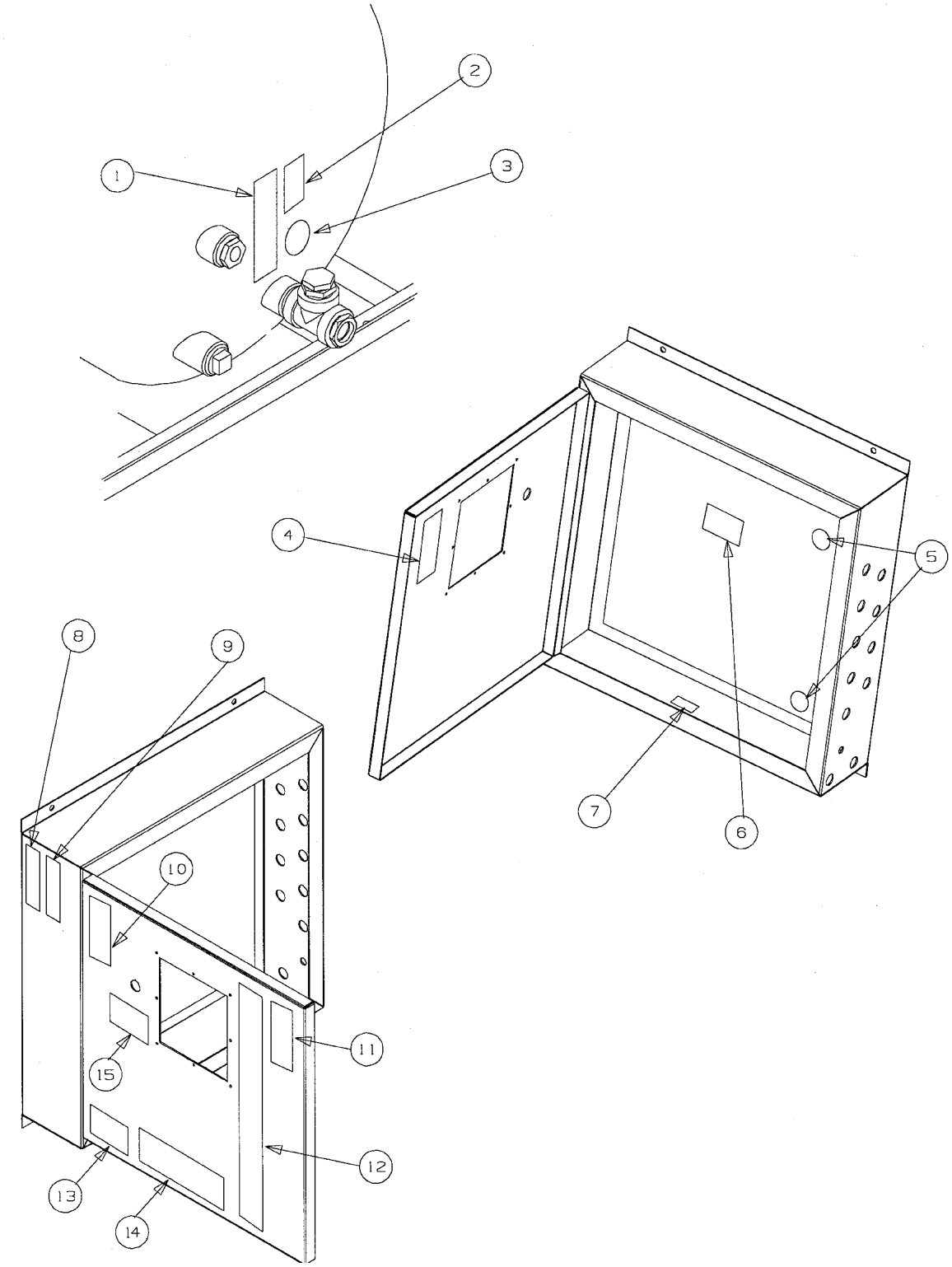

7.15 DECAL LOCATIONS

key number	*description*	*part number*	*quantity*
1	sign, warning “compressor fluid fill cap”	049685	1
2	decal, warning mixing fluids	02250110–891	1
3	decal, fluid Sullube **(II)**	02250069–389	1
4	sign, warning ground fault	049852	1
5	decal, earth ground	02250075–046	1
6	decal, danger high voltage	042218	1
7	decal, 460 volt **(I)**	02250069–399	1
8	sign, warning “food grade” lube	250003–144	1
9	sign, air breathing (danger)	250027–935	1
10	decal, warning auto start	250017–903	1
11	sign, danger electrocution	049850	1
12	decal, Sullair logo	02250059–048	2
13	decal, ISO 9001	02250057–624	1
14	decal, LS–25S	02250061–361	1
15	decal, autostart	041065	1
16	sign, warning sever–fan port **(III)**	049965	1
17	sign, warning sever – fan **(IV)**	049855	2
18	decal, rotation **(III)**	250021–564	1
19	decal, fork lifting **(IV)**	241814	2
20	decal, actuator valve positioning **(V)**	250029–784	1
21	decal, warning actuator **(V)**	250029–836	1

(I) Decal varies in accordance with machine voltage. For machines with voltage other than 460, consult factory for decal part number.

(II) This decal is used in conjuction with standard fill Sullube fluid. If your compressor contains an optional fill, consult factory to obtain the proper fluid decal part number. **DO NOT MIX FLUIDS.**

(III) Refer to *Section 7.12, Enclosure* for location.

(IV) Refer to *Section 7.3, Motor, Compressor Frame and Parts* for location.

(V) Refer to *Section 7.10, Compressor Actuator* for location.

PLEASE NOTE: WHEN ORDERING PARTS, INDICATE SERIAL NUMBER OF COMPRESSOR

7.16 PIPING AND INSTRUMENTATION

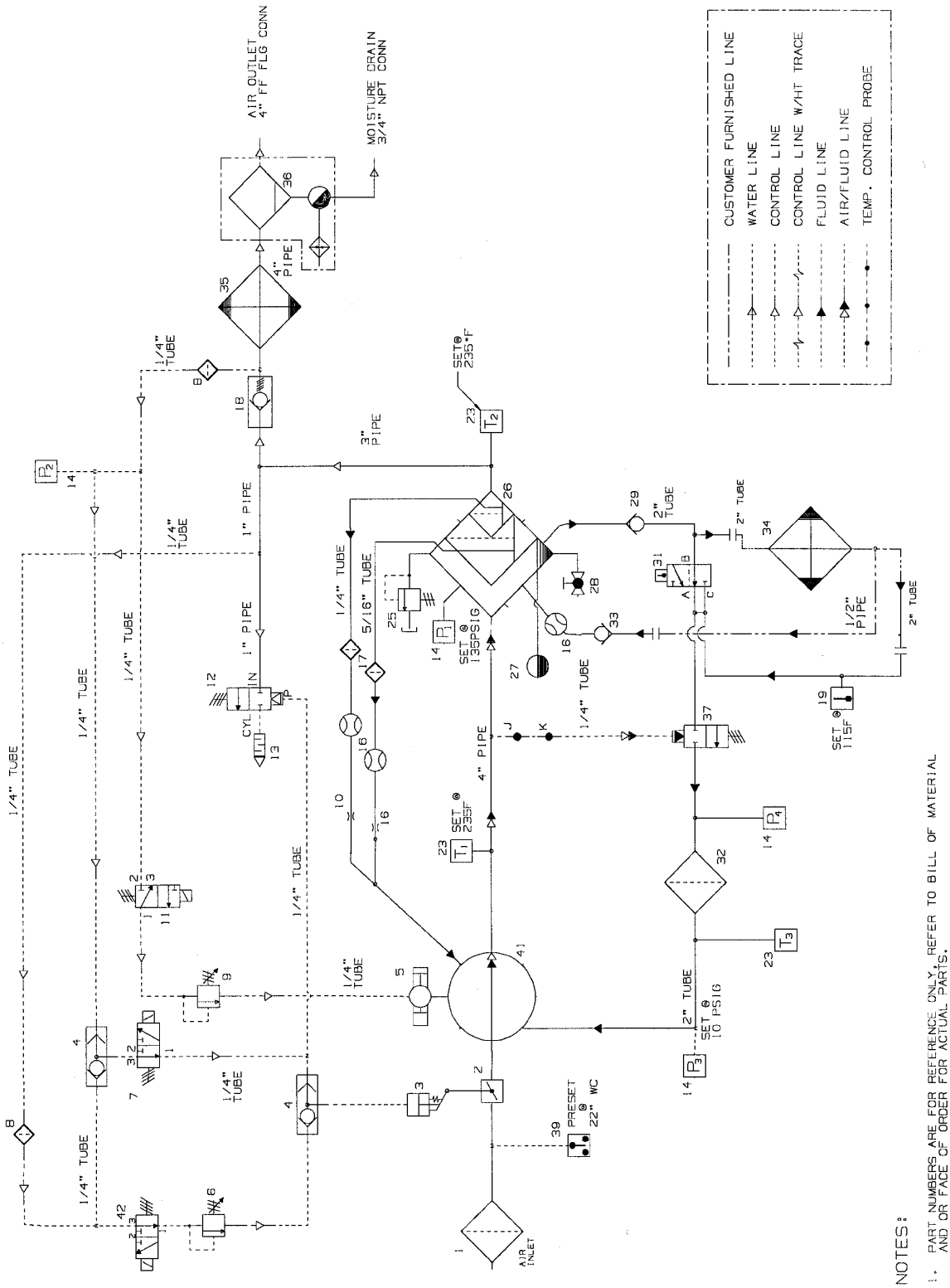

02250122–160R8

7.16 PIPING AND INSTRUMENTATION

ITEM NO.	TAG NO.	PART NO.	DESCRIPTION	REV	QTY
47	HY-651	409067	VALVE, SOLENOID 1/4" 3-WAY		1
46		————	VALVE, MOISTURE BLEED		1
45	PRV-653	249807	VALVE, RELIEF 1/2" 140 PSI		1
44		242221	TANK, ACCUMULATOR 415 CU. IN.		1
43		049905	VALVE, CHECK 1/4"		2
42	HY-653	047803	VALVE, SOLENOID MEC/SEQUENCING		1
41		————	UNIT, COMPRESSOR 25 STRETCH		1
40	PI-654,655,656	040691	GAUGE, PRESS.		3
39	PS-557	02250078-249	SWITCH, VAC. 22" W.C. N4		1
38	HY-658	043877	VALVE, SOLENOID 1/4"		1
37		016742	VALVE, OIL STOP 2"		1
36		250004-597	SEPARATOR, COMBO TRAP		1
35		049984	AFTERCOOLER		1
34		250004-201	COOLER, FLUID		1
33		042694	VALVE, CHECK 1/2"		2
32		250007-219	FILTER, FLUID		1
31	HY-659	02250043-433	VALVE, THERMAL 2" 140F		1
30	PRV-660	046556	VALVE, REGULATOR		1
29		040671	VALVE, CHECK 2"		1
28		040520	VALVE, GLOBE 3/4"		1
27	HY-659	040279	GLASS, FLUID LEVEL 1 1/2" SIGHT		1
26		250002-038	TANK, FLUID SEP. 30" DIA.		1
25	PRV-662	407003	VALVE, RELIEF 1 1/2" 150#		1
24		045459	STRAINER, OIL PUMP SUCTION		1
23	TE-663,664,665	250039-909	PROBE, 100 OHM RTD		3
22		250018-782	PUMP, FLUID SYS.		1
21		250034-123	ELEMENT, PRIMARY SEPARATOR		1
20		250034-129	ELEMENT, SECONDARY SEPARATOR		1
19	TS-666	043239	SWITCH, TEMP NO 115° F		1
18		250033-821	VALVE, MIN. PRESS. CHECK 3" NPT		1
17		241771	STRAINER, V-TYPE 300PSI 1/4"		2
16	FI-667,668,669	046559	GLASS, SIGHT 1/4"		3
15	FE-670	027443	ORIFICE		1
14	PT-671,672,673,674	02250078-933	PRESSURE TRANSDUCER		4
13		040758	SILENCER, AIR 3/8"		1
12	HY-675	409783	VALVE, BLOWDOWN 1" NC 2-WAY		1
11	HY-676	409067	VALVE, SOLENOID 1/4" 3-WAY 115V UNIV.		1
10	FE-677	040381	ORIFICE		1
9	PRV-678	408275	VALVE, PRESS. REG.		1
8		408389	FILTER, CONTROL 1/4" NPT		2
7	HY-679	040528	VALVE, SOLENOID 1/4" 3-WAY 115VAC		1
6	DPR-680	406929	VALVE, DIFF. PRESS. REG. 1/4" NPT		1
5		————	VALVE, SPIRAL		1
4		408893	VALVE, SHUTTLE 1/4"		3
3		011682-003	CONTROL, SULLICON 25S		1
2		————	VALVE, INLET BUTTERFLY 10"		1
1		250006-718	FILTER, 18" AIR INLET		1

02250122–159R2

7.17 WIRING DIAGRAM

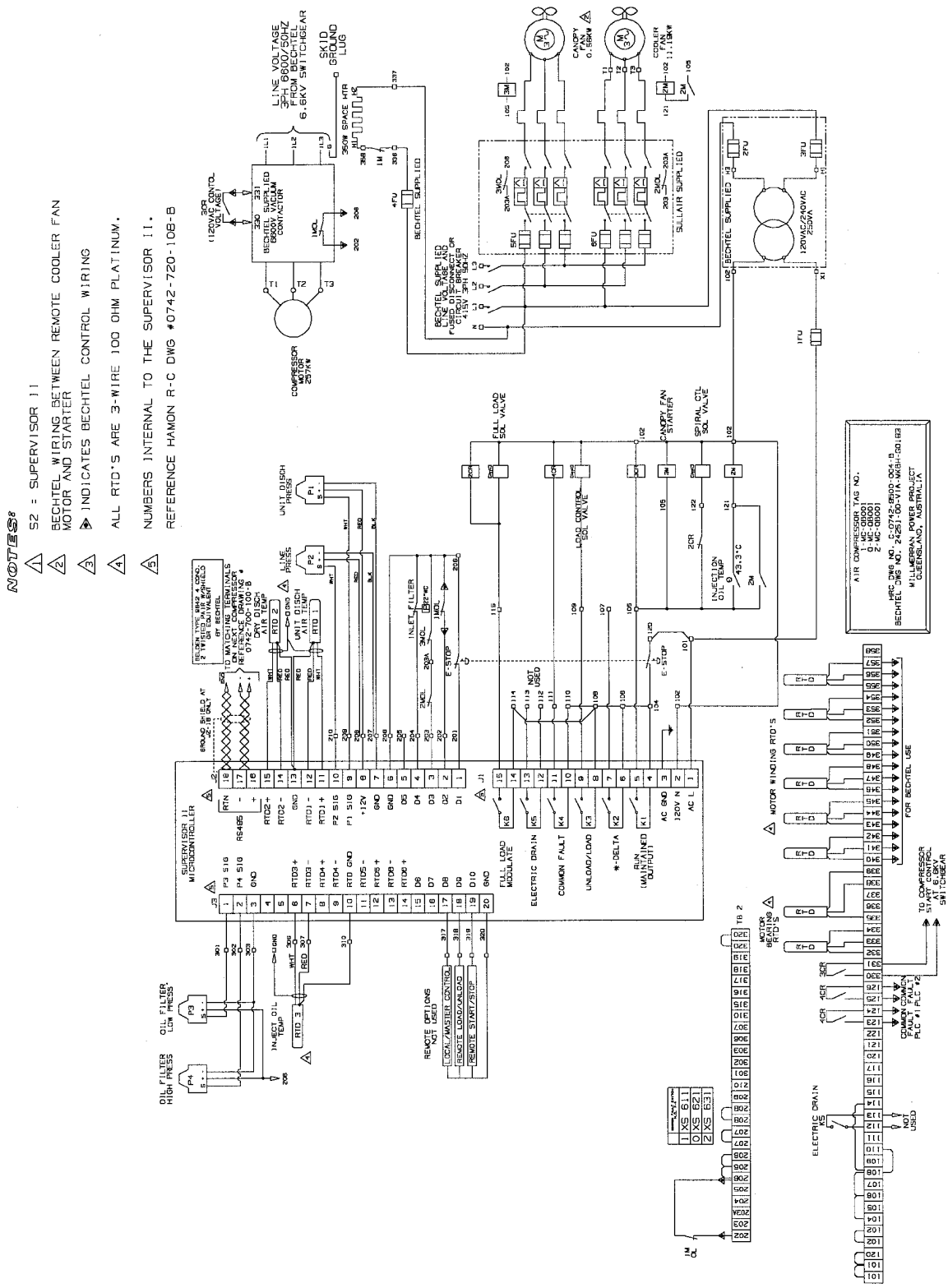

02250122–159R2

WORLDWIDE SALES AND SERVICE

R

SULLAIR ASIA, LTD.
Sullair Road, No. 1
Chiwan, Shekou
Shenzhen, Guangdong PRV.
PRC POST CODE 518068
Telephone: 755-6851686
Fax: 755-6853473

SULLAIR EUROPE, S.A.
Zone Des Granges BP 82
42602 Montbrison Cedex, France
Telephone: 33-477968470
Fax: 33-477968499

SULLAIR CORPORATION
3700 East Michigan Boulevard
Michigan City, Indiana 46360 U.S.A.
Telephone: 1-219-879-5451
Fax: (219) 874-1273
Fax: (219) 874-1835 (Parts)
Fax: (219) 874-1288 (Service)

CE

Printed in U.S.A.

Specifications Subject To
Change Without Prior Notice

E01