SPXFLOW

INSTRUCTION MANUAL

HBP Series

Blower Purge Desiccant Compressed Air Dryer

FORM NO.: 3158050 REVISION: 12/2017

READ AND UNDERSTAND THIS MANUAL PRIOR TO OPERATING OR SERVICING THIS PRODUCT.

MODELS	RATED FLOW	MODEL REFERENCE
HBP500	500 SCFM	500
HBP600	600 SCFM	600
HBP750	750 SCFM	750
HBP900	900 SCFM	900
HBP1050	1050 SCFM	1050
HBP1300	1300 SCFM	1300
HBP1500	1500 SCFM	1500
HBP1800	1800 SCFM	1800
HBP2200	2200 SCFM	2200
HBP2600	2600 SCFM	2600
HBP3200	3200 SCFM	3200
HBP3600	3600 SCFM	3600
HBP4300	4300 SCFM	4300

Hankison®

Contents

1.0 General Safety Information 1
2.0 Receiving, Storing, and Moving..... 1
3.0 Description 2
4.0 Installation 2
5.0 Instrumentation..... 7
6.0 Operation..... 11
7.0 Maintenance..... 28
8.0 Troubleshooting..... 30

DRAWINGS
Electrical Schematic – 460VAC, 3 phase 33
Electrical Schematic – 575VAC, 3 phase 34
Electrical Data – Fusing & Wire Sizing..... 35
P&ID Schematic - Models 500 through 600 36
P&ID Schematic - Models 750 through 4300 38

REPLACEMENT PARTS
Models 500 through 600..... 40
Models 750 through 1800..... 42
Models 2200 through 2600..... 44
Models 3200 through 4300..... 46

WARRANTY 49

1.0 General Safety Information

This equipment is designed and built with safety as a prime consideration; industry-accepted safety factors have been used in the design. Each dryer is checked at the factory for safety and operation. All pressure vessels which fall under the scope of ASME Section VIII, are hydrostatically tested in accordance with the latest addenda. A factory-installed safety relief valve is standard on each dryer.

WARNING — The following safety rules must be observed to ensure safe dryer operation. Failure to follow these rules may void the warranty or result in dryer damage or personal injury.

1. Never install or try to repair any dryer that has been damaged in shipment. See the Receiving and Inspection instructions in this manual for appropriate action.
2. This equipment is a pressure-containing device. Never operate the dryer at pressures or temperatures above the maximum conditions shown on the data plate.

   Never dismantle or work on any component of the dryer or compressed air system under pressure. Vent internal air pressure to the atmosphere before servicing.
3. This equipment requires electricity to operate. Install equipment in compliance with national and local electrical codes. Standard equipment is supplied with NEMA 4, 4X electrical enclosures and is not intended for installation in hazardous environments.

   Never perform electrical service on the dryer unless the main power supply has been disconnected. Parts of the control circuit may remain energized when the power switch is turned off.
4. Air treated by this equipment may not be suitable for breathing without further purification. Refer to OSHA standard 1910.134 for the requirements for breathing quality air.
5. Certain parts of the dryer are not insulated and may become hot during normal operation of the dryer. Do not touch any of these areas without first determining the surface temperature.
6. Use only genuine replacement parts from the manufacturer. The manufacturer bears no responsibility for hazards caused by the use of unauthorized parts.

Safety instructions in this manual are boldfaced for emphasis. The signal words ***DANGER***, ***WARNING*** and ***CAUTION*** are used to indicate hazard seriousness levels as follows:

DANGER—Immediate hazard which will result in severe injury or death.

WARNING—Hazard or unsafe practice which could result in severe injury or death.

CAUTION—Hazard or unsafe practice which could result in minor injury or in product or property damage.

The dryer data plate, attached to the electrical control box, contains critical safety and identification information. If the data plate is missing or defaced, immediately contact your local distributor for a replacement.

2.0 Receiving, Storing, and Moving

2.1 Receiving and Inspection

This shipment has been thoroughly checked, packed and inspected before leaving our plant. It was received in good condition by the carrier and was so acknowledged.

Immediately upon receipt, thoroughly inspect for visible loss or damage that may have occurred during shipping. If this shipment shows evidence of loss or damage at time of delivery to you, insist that a notation of this loss or damage be made on the delivery receipt by the carrier's agent. Otherwise no claim can be enforced against the carrier.

Also check for concealed loss or damage. When a shipment has been delivered to you in apparent good order, but concealed damage is found upon unpacking, notify the carrier immediately and insist on his agent inspecting the shipment. The carrier will not consider any claim for loss or damage unless an inspection has been made. If you give the carrier a clear receipt for goods that have been damaged or lost in transit, you do so at your own risk and expense. Concealed damage claims are not our responsibility as our terms are F.O.B. point of shipment. Shipping damage is not covered by the dryer warranty.

2.2 Storing

Store the dryer indoors to prevent damage to any electrical or mechanical components. All packaging material should be left in place until the dryer is in position.

2.3 Handling

The dryer is designed to be moved by means of the shipping skid or the base channels. The dryer may also have lifting lugs for use with an overhead crane. Be sure to attach all of the lift points and use appropriate spreader bars to prevent damage to the dryer.

CAUTION — Never lift the dryer by attaching hooks or slings to the piping, or to any part other than the lifting lugs. Severe structural damage could occur.

3.0 Description

3.1 Function

Blower purge type regenerative dryers are an economical and reliable way to dry compressed air to dew points below the freezing point of water. Desiccant dryers lower the dew point of compressed air by adsorbing the water vapor present in the compressed air onto the surface of the desiccant. Adsorption continues until equilibrium is reached between the partial pressure of the water vapor in the air and that on the surface of the desiccant.

These dryers continuously dry compressed air by using two identical towers, each containing a desiccant bed. While one tower is on-stream drying, the other tower is off-stream being regenerated (reactivated, i.e. dried out). The towers are alternated on- and off-stream so that dry desiccant is always in contact with the wet compressed air. In this way a continuous supply of dry air downstream of the dryer is possible. The switching from one tower to the other is controlled by a solid-state controller on either a fixed time basis (standard) or a demand basis (optional).

When a tower is placed off-line, it is slowly depressurized and the desiccant is regenerated. First, a blower draws in ambient air which is heated. The heated air flows through the desiccant bed, desorbs the moisture from the desiccant, and carries the desorbed water out of the dryer. The blower and heater are turned off when the desiccant bed is fully heated. When configured for cooling, a portion of the dry compressed air is diverted from the main air flow and throttled to near atmospheric pressure. This extremely dry, low pressure air passes through the hot off-line tower, partially cooling the desiccant bed and reducing the dew point spike after tower change over. At the end of the cooling stage, the tower is repressurized to full line pressure. This prevents desiccant bed movement and downstream pressure loss when the tower goes back on-line.

4.0 Installation

4.1 System Arrangement

Install the dryer downstream of an aftercooler, separator, receiver, and high-efficiency oil-removing filter(s) so that the dryer inlet air is between 40°F (4.4°C) and 120°F (49°C) and contains no liquid water or oil. Liquid water and/or inlet air temperatures above 100°F (37.8°C) can reduce drying capacity. Contact your local distributor for information on proper dryer sizing at elevated inlet air temperatures.

Adequate filtration is required upstream of the dryer in order to protect the desiccant bed from liquid and solid contamination. Use an Air Line Filter in systems supplied by a non-lubricated (oil-free) air compressor. In systems supplied by a lubricated air compressor, use a High Efficiency Oil Removal Filter. A coarser filter will be required upstream of the Oil Removal Filter if heavy liquid or solid loads are present.

To ensure downstream air purity (prevent desiccant dust from traveling downstream) adequate filtration downstream of the dryer is required. A High Temperature Afterfilter, typically rated at 450°F (232°C) operating temperature and capable of removing all desiccant fines 1 micron and larger should be installed at the dryer outlet.

DANGER — This dryer must be fitted with a high efficiency coalescing filter and liquid drainer that is maintained properly. Failure to do so could result in an in-line fire.

WARNING — The afterfilter, if installed, must be rated for 450°F (232°C).

4.2 Ambient Air Temperature

Locate the dryer under cover in an area where the ambient air temperature will remain between 35°F (2°C) and 120°F (49°C).

NOTE: If dryer is installed in ambients below 35°F (2°C), low ambient protection requiring heat tracing and insulation of the prefilter bowls, auto drains and/or sumps, and lower piping with inlet switching and purge/repressurization valves is necessary to prevent condensate from freezing. If installing heat tracing, observe electrical class code requirements for type of duty specified. Purge mufflers and their relief mechanisms must be kept clear from snow and ice buildup that could prevent proper discharge of compressed air.

4.3 Location and Clearance

Install the dryer on a level pad. Ensure the dryer is level by grouting or shimming as necessary. Holes are provided in the dryer base members for floor anchors. Securely anchor the dryer frame to the floor. Allow 24 inches clearance on all sides of the dryer for servicing. Provide adequate clearance for prefilter element, afterfilter element and heater element replacement. Provide protection for the dryer if it is installed where heavy vehicles or similar portable equipment is likely to cause damage.

4.3.1 Blower Installation (Models 3200 through 4300 only)

NOTE: Field installation of the purge blower to the dryer unit is required on model sizes 3200, 3600, and 4300. Refer to Figure 3b for assistance in connecting the purge blower to the dryer unit.

1. Align and install the purge blower skid to the dryer unit utilizing the expansion joint provided (shipped mounted to the purge blower). Use the mounting hardware (nuts, bolts, flange gasket, etc.) provided to connect the purge blower skid to the dryer unit.

   Ensure the purge blower skid is level by grouting or shimming as necessary. Holes are provided in the purge blower skid base members for floor anchors. Securely anchor the purge blower skid to the floor.

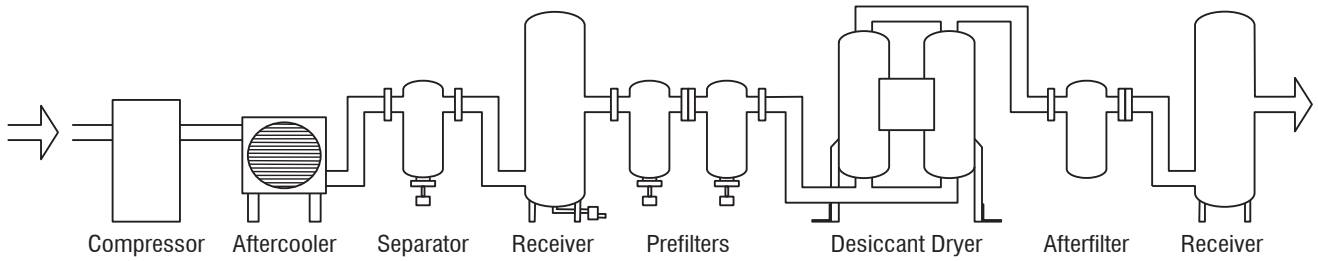

Figure 1
Typical System Configuration

2. Remove all mounting bolts from blower base which MAY have been used for shipping purposes. The blower is designed to vibrate freely on its vibration pad during operation.

   NOTE: The blower manufacturer cautions that the blower should not be bolted down during operation.

3. Reconnect the blower motor power connections to the dryer unit according to the electrical drawings in the back of this manual. Be sure to follow all applicable electrical codes.

CAUTION: The blower and motor have been completely checked and operated prior to shipment from the factory. After connecting the power supply to the motor, momentarily energize the blower motor starter. Blower rotation should match the indicator arrow on the blower housing. If not, disconnect power and reverse the wiring connections.

4.4 Piping and Connections

All external piping must be supplied by the user unless otherwise specified. Refer to Figure 2 for connection sizes. Inlet and outlet isolation valves and a vent valve are recommended so the dryer can be isolated and depressurized for servicing. The connections and pipe fittings must be rated for or exceed the maximum operating pressure given on the dryer nameplate and must be in accordance with industry-wide codes. Be sure all piping is supported. Do not allow the weight of any piping to bear on the dryer or filters. Piping should be the same size as or larger than the dryer connection. Piping smaller than the dryer connections will cause high pressure drop and reduce drying capacity.

If the purge exhaust piping must be extended outside the dryer area, choose a combination of diameters, lengths, and turns that limits the additional pressure drop to 1/4 psid or less. **BACK PRESSURE WILL CAUSE DRYER MALFUNCTION.** Consult the factory for piping details if required.

WARNING — Do not operate dryer without installed mufflers. Exhausting compressed air directly to atmosphere will result in noise levels above OSHA permissible levels and rapidly expanding gas could potentially cause harm to persons or property.

Dryer bypass piping may be installed to allow uninterrupted airflow during servicing. If the downstream application cannot tolerate unprocessed air for short periods, install a second dryer in the bypass line.

CAUTION — Do not hydrostatically test the piping with the dryer in the system. The desiccant will be damaged if saturated with water.

4.5 Electrical Connections

WARNING — These procedures require entering gaining access to the dryer's electrical enclosure(s). All electrical work must be performed by a qualified electrical technician.

Connect the proper power supply to the dryer according to the electrical drawings in the back of this manual. Be sure to follow all applicable electrical codes.

NOTE: A disconnect switch is not provided as standard equipment and therefore, must be supplied by the customer.

Dry contacts (voltage free) are provided in the low tension electrical enclosure for a remote alarm. The contact ratings are shown on the electrical drawing.

Connections to voltage-free common alarm contacts with a minimum 5-amp rating can be made at terminals TB4-1 through 3.

- Terminal TB4-3 is the common alarm connection.
- Terminal TB4-1 is the N.O.. (normally open) contact connection.
- Terminal TB4-2 is the N.C. (normally closed) contact connection.
- The alarm relay coil is energized when power is supplied to the controller input terminals and there is no alarms.
- The coil is de-energized when power is removed or when an alarm condition exists.
- The common alarm is designed to activate on:
  a) either a dryer fault condition or a service reminder, or b) a dryer fault condition. This is user selectable.

Dimensions and Connections – Dryer Only

Figure 2 (continued on next page)

(For construction purposes, contact factory to request certified drawings when mounted filters are included with order)

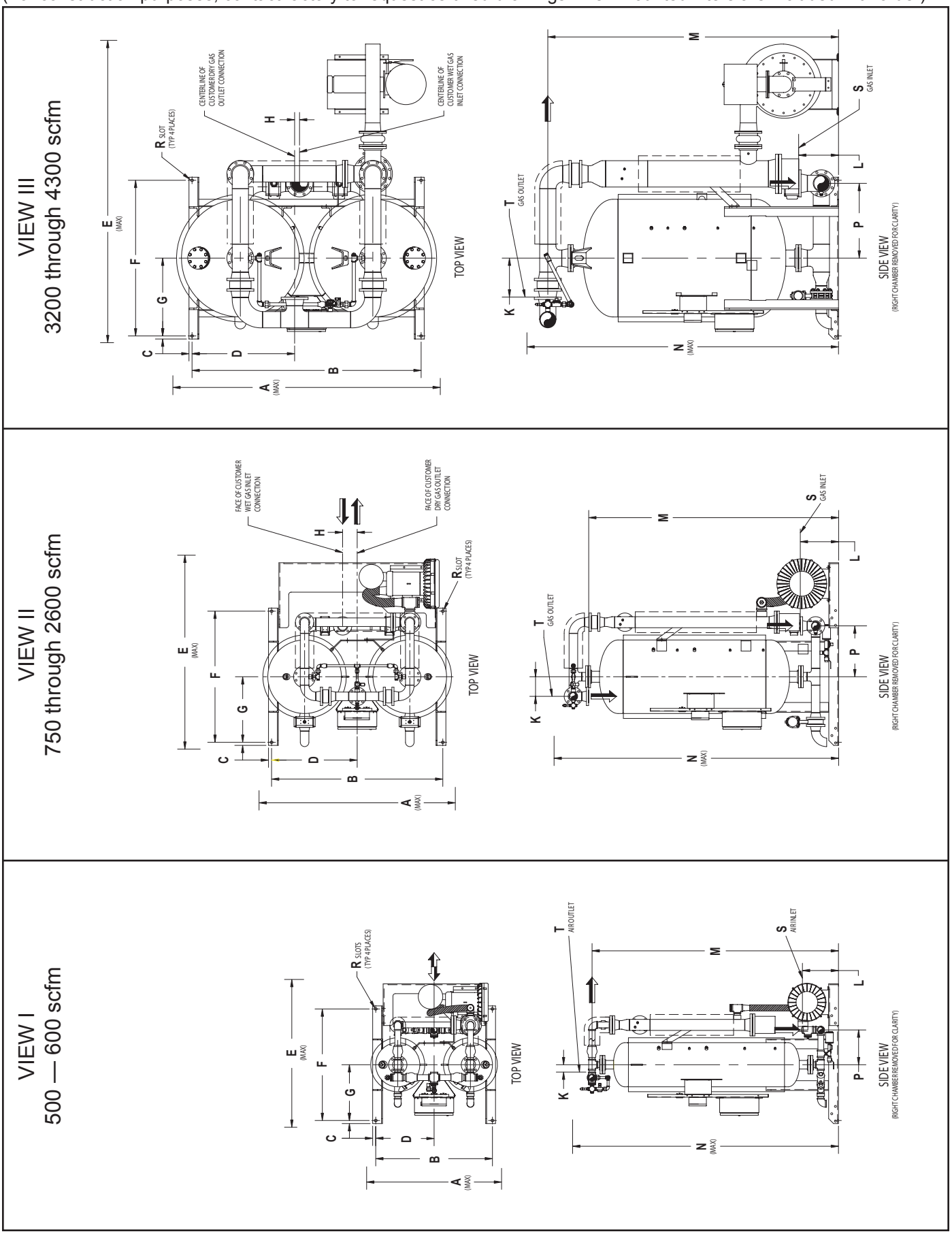

Dimensions and Connections

Figure 2 (continued from previous page)

DIMENSIONS IN INCHES													
MODEL	500	600	750	900	1050	1300	1500	1800	2200	2600	3200	3600	4300
VIEW REF.	I	I	II	II	II	II	II	II	II	II	III	III	III
A	53	55	60	60	64	66	80	80	85	85	85	85	109
B	46.3/4	47.9/16	52.11/16	52.11/16	56.7/16	57.5/16	69.13/16	69.13/16	73.3/8	73.3/8	82.7/8	82.7/8	93.3/8
C	1.1/4	1.1/4	1.1/4	1.1/4	1.1/4	1.1/4	1.1/4	1.1/4	1.1/4	1.1/4	1.1/4	1.1/4	1.1/4
D	23.3/8	23.13/16	26.5/8	26.5/8	29.9/16	30	34.7/8	34.7/8	38.9/16	38.9/16	36.9/16	36.9/16	41.13/16
E	59	60	68	68	62	73	79	79	86	89	107	116	123
F	45.1/2	45.1/2	53.1/2	53.1/2	53.1/2	53.1/2	53.1/2	53.1/2	59.1/2	59.1/2	59.1/2	59.1/2	63.1/2
G	22.3/4	22.3/4	26.3/4	26.3/4	26.3/4	26.3/4	26.3/4	26.3/4	29.3/4	29.3/4	29.3/4	29.3/4	31.3/4
H	—	—	1.1/4	1.1/4	3.1/4	3.1/4	5.15/16	5.15/16	4.3/8	4.3/8	3/4	5	2
K	3	3	8	8	8	8	8	8	7.1/4	7.1/4	15.7/8	15.7/8	15.7/8
L	12.11/16	13.3/16	13.7/16	13.7/16	13.3/16	13.3/16	15.5/8	15.5/8	17.1/4	17.1/4	14.9/16	16.9/16	16.1/4
M	96.15/16	100.7/16	100.11/16	100.11/16	99.13/16	104.13/16	101.7/8	101.7/8	115.7/8	115.7/8	115.13/16	122.1/16	118.1/2
N	105	108	114	114	113	118	116	116	128	128	128	134	130
P	13.3/16	14.3/16	15.3/4	15.3/4	16.3/4	17.3/4	20.3/4	20.3/4	22.1/4	22.1/4	26.1/2	27.1/2	30.1/2
R	7/8 X 1.1/4	7/8 X 1.1/4	7/8 X 1.1/4	7/8 X 1.1/4	7/8 X 1.1/4	7/8 X 1.1/4	7/8 X 1.1/4	7/8 X 1.1/4	7/8 X 1.1/4	7/8 X 1.1/4	7/8 X 1.1/4	7/8 X 1.1/4	7/8 X 1.1/4
S	2 NPT	2 NPT	3 FLANGE	3 FLANGE	3 FLANGE	3 FLANGE	3 FLANGE	4 FLANGE	4 FLANGE	4 FLANGE	4 FLANGE	6 FLANGE	6 FLANGE
T	2 NPT	2 NPT	3 FLANGE	3 FLANGE	3 FLANGE	3 FLANGE	3 FLANGE	4 FLANGE	4 FLANGE	4 FLANGE	6 FLANGE	6 FLANGE	6 FLANGE
WT/LBS	1,900	2,200	2,500	2,600	3,000	3,600	5,400	5,500	8,100	8,200	9,400	9,900	12,350
DIMENSIONS IN MILLIMETERS													
MODEL	500	600	750	900	1050	1300	1500	1800	2200	2600	3200	3600	4300
VIEW REF.	I	I	II	II	II	II	II	II	II	II	III	III	III
A	1346	1397	1524	1524	1626	1676	2032	2032	2159	2159	2159	2159	2769
B	1187	1208	1338	1338	1434	1456	1773	1773	1864	1864	2106	2106	2372
C	32	32	32	32	32	32	32	32	32	32	32	32	32
D	594	604	677	677	750	761	886	886	980	980	929	929	1062
E	1491	1531	1734	1734	1580	1862	2009	2009	2186	2256	2708	2955	3132
F	1156	1156	1359	1359	1359	1359	1359	1359	1511	1511	1511	1511	1613
G	578	578	679	679	679	679	679	679	756	756	756	756	806
H	—	—	32	32	83	83	151	151	111	111	19	127	51
K	76	76	203	203	203	203	203	203	184	184	403	403	403
L	322	335	341	341	335	335	397	397	438	438	370	421	413
M	2462	2551	2557	2557	2535	2662	2588	2588	2943	2943	2942	3100	3010
N	2664	2753	2903	2903	2870	2997	2946	2946	3246	3246	3246	3404	3313
P	335	360	400	400	425	451	527	527	565	565	673	699	775
R	22 X 32	22 X 32	22 X 32	22 X 32	22 X 32	22 X 32	22 X 32	22 X 32	22 X 32	22 X 32	22 X 32	22 X 32	22 X 32
S	2 NPT	2 NPT	3 FLANGE	3 FLANGE	3 FLANGE	3 FLANGE	3 FLANGE	4 FLANGE	4 FLANGE	4 FLANGE	4 FLANGE	6 FLANGE	6 FLANGE
T	2 NPT	2 NPT	3 FLANGE	3 FLANGE	3 FLANGE	3 FLANGE	3 FLANGE	4 FLANGE	4 FLANGE	4 FLANGE	6 FLANGE	6 FLANGE	6 FLANGE
WT/KGS	862	998	1,134	1,179	1,361	1,633	2,449	2,495	3,674	3,719	4,264	4,491	5,602

- For the common alarm to activate on either a dryer fault condition or a service reminder, the jumper at JP6 is removed. This is the default configuration.
- To have the common alarm activate on a dryer fault condition only, the jumper at JP6 is installed.

  NOTE: Before turning high voltage on to the dryer, an ohmic test should be performed on the heater elements to insure they are dry before proceeding with start-up. This should be done after extended shut downs and long delays between delivery and start-up. Connect one lead of a megger to an unpainted surface of the control panel or dryer frame. Connect the other lead to each phase on the load side of the contactor. Adjust the megger to the 1500 volt setting. Perform the ohmic test on each zone of the heaters. A minimum value of 500k ohms must be obtained.

CAUTION - Failure to ohmic test heaters after extended periods may cause heater failure.

4.5.1 RS-232 Connections

RS-232 connections can be made at the 3-pin connector labeled J3 and located at the upper left-handed corner of the control board. A cable for this connection can be purchased through your distributor.

4.6 Initial Desiccant Charge

Blower purge type regenerative dryers use activated alumina as the desiccant in the dryer towers.

Models 500 through 1050 are shipped with activated alumina (1/8" bead) in the dryer towers. Desiccant is shipped loose with all other standard models.

All desiccant shipped loose must be added to the dryer chambers before the dryer is put into service

Refer to TABLE 1, DESICCANT REQUIREMENTS for desiccant type and quantity per tower.

TO ADD DESICCANT

WARNING — The following procedure provides instructions for adding the initial desiccant to the towers. If replacing desiccant, refer to the "Procedure for Desiccant Charge Replacement" in Section 7.0.

1. Verify pressure gauges of both towers indicate 0 psig. If not, depressurize the towers according to the shutdown instructions in Section 6.
2. Remove the pipe plug or fill port flange cover (where applicable) from the desiccant fill port at the top of each tower. Refer to Figure 3 for the fill port location.

CAUTION – Pouring desiccant creates a fine dust; safety goggles, gloves and a dust mask should be worn by personnel installing desiccant. Refer to the Material Safety Data Sheet that accompanies desiccant shipped loose for more complete information.

CAUTION – Do not tamp the desiccant in the towers. Tamping damages desiccant and causes dusting.

3. Refer to Table 1 for desiccant **quantity per tower.**

   When using Table 1 you will find the desiccant quantities listed in layers. Each layer will vary in depth due to the type, quantity and purpose of the desiccant. Layer 1 must be installed first at the bottom of the vessel followed by layer number 2 etc., until the complete charge of desiccant has been installed.
4. Utilizing an appropriate sized funnel, fill each desiccant tower as follows:
   a. Install the required quantity of tabular support or activated alumina in layer 1 of each tower.
   b. Level layer 1 and each subsequent layer of desiccant as added to each chamber.
   c. Finish filling each tower with desiccant until all desiccant has been installed. LIGHT tapping on the tower sides with a soft-face mallet should yield additional free space to allow installation of all desiccant required. **DO NOT TAMP OR RAM DESICCANT**.
5. Clean the fill port closure. Replace the fill plug using Teflon tape or another pipe thread sealant suitable for compressed air service. Reinstall fill port flange cover (where applicable) in each desiccant tower.

TABLE 1
DESICCANT REQUIREMENTS
(Quantity per Tower)

Model	Layer #1		Layer #2		Layer #3	
	(lbs.)	(p/n)	(lbs.)	(p/n)	(lbs.)	(p/n)
500	354	AA-4	—	—	—	—
600	453	AA-4	—	—	—	—
750	590	AA-4	—	—	—	—
900	590	AA-4	—	—	—	—
1050	710	AA-4	—	—	—	—
1300	48	AA-25	876	AA-4	—	—
1500	92	AA-25	1167	AA-4	—	—
1800	92	AA-25	1167	AA-4	—	—
2200	161	AA-25	1706	AA-4	—	—
2600	161	AA-25	1706	AA-4	—	—
3200	258	AA-25	2119	AA-4	—	—
3600	258	AA-25	2353	AA-4	—	—
4300	719	TS-50	146	AA-25	2679	AA-4

AA = Activated Alumina
TS = Tabular Support

5.0 Instrumentation

The following instrumentation helps in monitoring dryer operation and performance. Instruments which are available as options are so noted.

Blower Purge Air dryers are rated NEMA 4 and include the following:

- Solid State Controls
- Chamber Pressure Gauges
- Purge Flow Pressure Gauge
- Energy Management (Option A)
- Energy Management System & Dew Point Transmitter (Option B)

5.1 Controls

The solid-state dryer controls are located in a polycarbonate, NEMA Class 4/4X, IP66 rated electrical enclosure mounted to a center panel located between the two desiccant towers. Control features include:

- 15 LED's to indicate operating status and fault conditions.
- Two line text display to provide status and diagnostic messages.
- Upon power loss, dryer "fails safe" (inlet valve remains in position). On power recovery, controller resumes where power was lost.

5.2 Chamber Pressure Gauges

A gauge mounted on the gauge panel indicates which chamber is on-stream and which is regenerating. The gauge for the onstream tower indicates operating pressure; the gauge for the regenerating tower indicates 0 psig.

5.3 Purge Flow Pressure Gauge

A gauge mounted on the gauge panel of the dryer indicates purge air pressure.

5.4 Energy Management System

The optional Energy Management System (EMS) automatically adjusts dryer operation to compensate for changes in operating conditions. Air samples are continuously taken from the on-stream tower and passed over a moisture probe which senses both temperature and relative humidity. The moisture content of the air within the desiccant bed is then precisely determined. The on-stream tower will not depressurize and regenerate until a predetermined set point has been reached. This elimination of unnecessary regeneration reduces energy consumption and extends dryer desiccant and component life.

5.5 Dew Point Transmitter

This option monitors and displays outlet pressure dew points and provides an alarm signal if the dew point exceeds user-specified set point. Recommended calibration interval is 12 months. Contact the service department for details.

Operation – The dew point is measured at the dryer operating pressure and is displayed in the operator interface. If the dew point is outside of the temperature range, the display will indicate an over-range (high dew point) or under-range (low dew point) condition. A defective sensor assembly or an electronics malfunction could also cause the transmitter to indicate under-range.

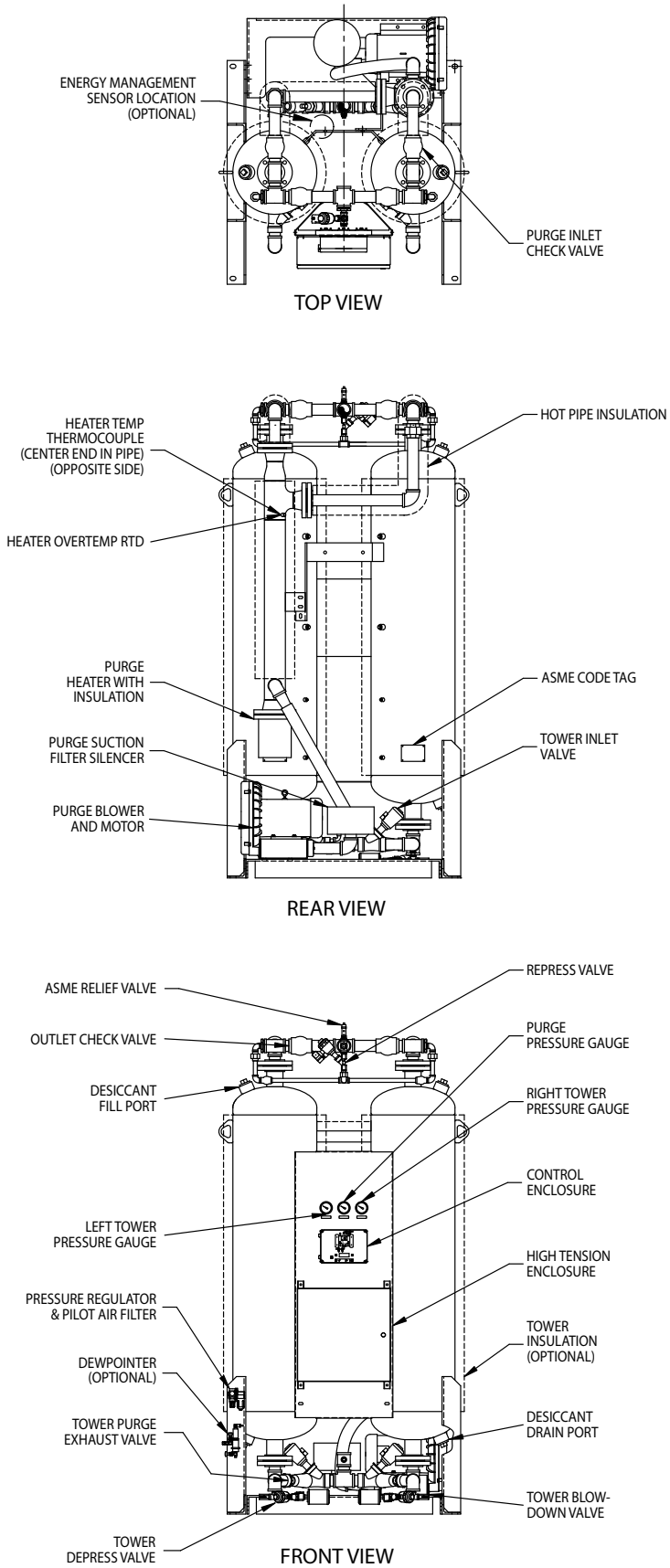

Figure 3
General Layout Drawing
(Models 500 through 600)

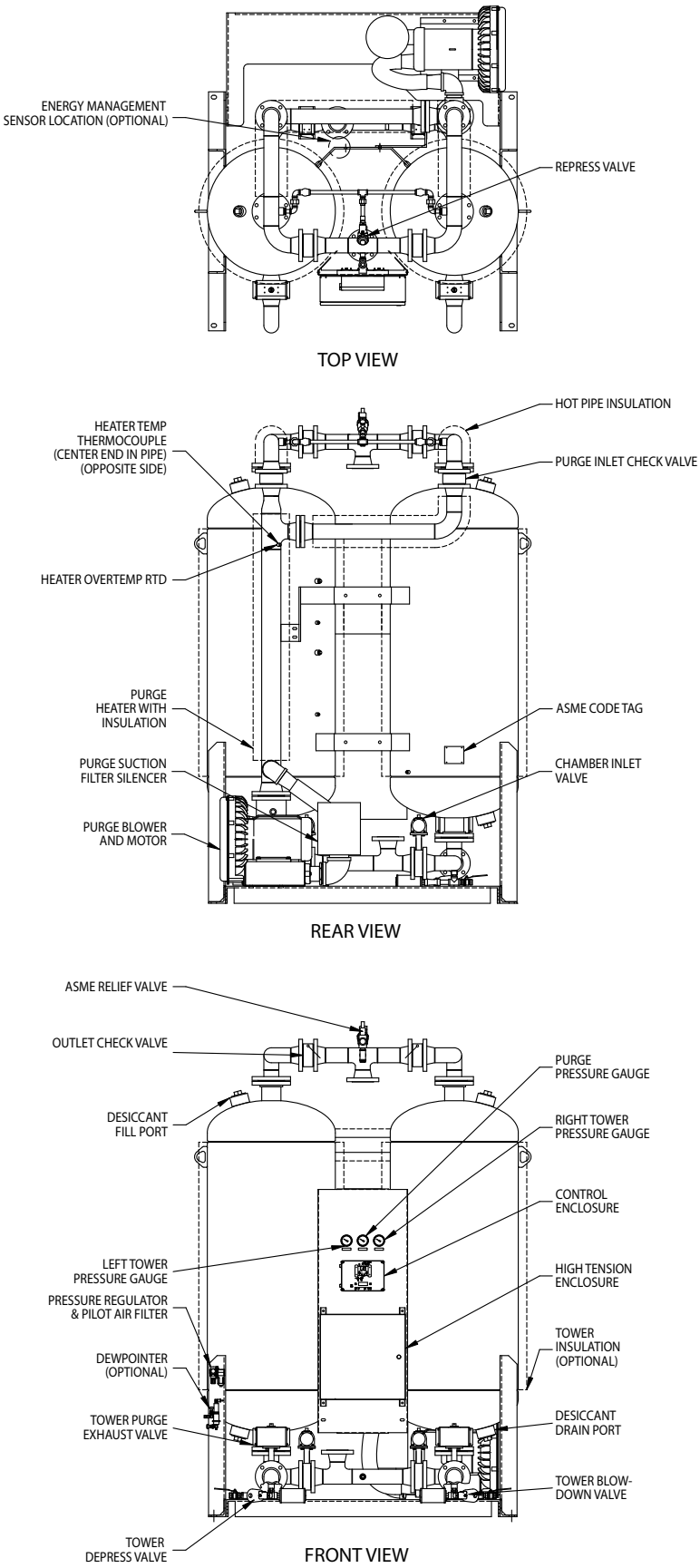

Figure 3a
General Layout Drawing
(Models 750 through 2600)

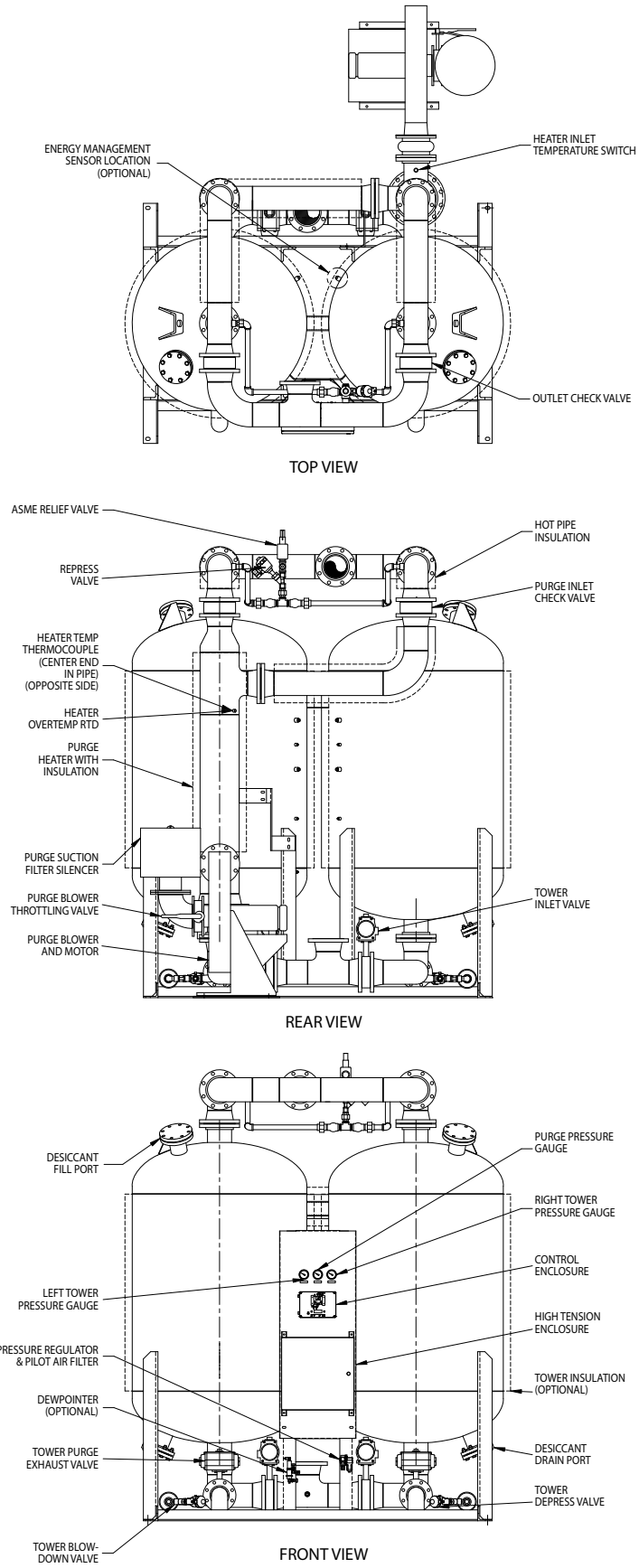

Figure 3b
General Layout Drawing
(Models 3200 through 4300)

6.0 Operation

6.1 Controls

A solid-state controller controls valve and heater operation, monitors all critical operating conditions, and indicates operating status on a 2-line LCD display operator interface. The controller receives input data from pressure switches, temperature sensors and the operator interface. The operator interface displays information about the dryer operating status and is used to change the dryer operating mode.

6.2 Operating Modes

6.2.1 Automatic and Manual Advance

The drying and regeneration cycles are divided into discrete steps. The operator selects either one of the automatic advance modes (Energy Management, Dew Point Control, or Fixed Cycle) or manual advance mode (Test Cycle) through the operator interface.

Selecting any of the automatic advance modes enables a timer in the controller to advance the program step-by-step according to the programmed schedule.

Setting up the controller for manual advance disables the timer and the operator can advance the program one step at a time. This mode is used for diagnostic purposes.

6.2.2 Fixed, Energy Management or Dew Point Control Operation

The operator interface is used to select either Fixed, Energy Management or Dew Point Control operation. In Fixed Cycle operation, each tower is on-line (drying) for a fixed time period regardless of the operating conditions. In Energy Management or Dew Point Control operation, a tower remains on-line until the desiccant bed has been fully utilized. For lower than designed moisture loads, this results in longer drying cycles, longer time between regenerations and, therefore lower energy consumption. Energy Management or Dew Point Control operation are optional features.

6.3 Operating Sequence Description

1. Left Tower Drying – Right Tower Regenerating

   At the start of the Left Tower Drying cycle, Left Inlet Valve **V1** opens, Right Inlet Valve **V2** closes to isolate the two towers. Wet, compressed air flows up through the left tower where it is dried. The dry air exits the dryer through the Left Outlet Check Valve **V7**.

   Next, the Right Depressurization Valve **V10** is opened and the right tower is slowly depressurized. Air exits through exhaust muffler **M2**.

   After the right tower has depressurized, the Right Purge Valve **V4** is opened and the Blower **M** and Heater **H1** are energized. The heated air flows through the Right Purge Check Valve **V6**, down through the right tower, and exits through the Right Purge Valve **V4**. The Blower intake air is filtered to keep dust and dirt from entering the dryer. The Blower **M** and Heater **H1** are de-energized when the temperature at the bottom of the right tower, as sensed by the Right Tower Temperature Sensor **RTD2**, reaches the Heat Termination set point. This indicates that the bed has been fully heated.

   NOTE: Blower will continue to run briefly at the end of the Heating Step to sweep residual heat from the heater.

   The Repressurization Valve **V11** is opened. A portion of the dry air from the left tower now flows through Repressurization Valve **V11**. This air is throttled to near atmospheric pressure by Repressurization/ Sweep Orifice **O2**. The dry, low pressure air flows down through the right tower cooling the desiccant bed, and exits through the Right Tower Purge Exhaust Valve **V4.**

   The Cooling Step continues until:
   a) the right tower bed temperature falls to 150°F or,
   b) it is time to repressurize the right tower,
   whichever occurs first.

   NOTE: In fixed cycle, the bed will normally be partially cooled because the repressurization step will occur before the bed temperature can fall to 150°F.

   NOTE: In Energy Management or Dew Point Control, as the drying time extends beyond 4 hours, additional cooling time becomes available thus the cooling step will frequently terminate based on temperature providing complete bed cooling.

   At the end of the Cooling Step, the Right Tower Purge Exhaust Valve **V4** is closed. The right tower slowly repressurizes to full line pressure and is ready to go back on-line.

   NOTE: Bed cooling can be disabled by moving JP4 to the “ON” position.

2. Right Tower Drying – Left Tower Regenerating

   At the start of the Right Tower Drying cycle, Right Inlet Valve **V2** opens, Left Inlet Valve **V1** closes to isolate the two towers. Wet, compressed air flows up through the right tower where it is dried. The dry air exits the dryer through the Right Outlet Check Valve **V8**.

   Next, the Left Depressurization Valve **V9** is opened and the left tower is slowly depressurized. Air exits through exhaust muffler **M1**.

   After the left tower has depressurized, the Left Purge Valve **V3** is opened and the Blower **M** and Heater **H1** are energized. The heated air flows through the Left Purge Check Valve **V5**, down through the left tower, and exits through the Left Purge Valve **V3**. The Blower intake air is filtered to keep dust and dirt

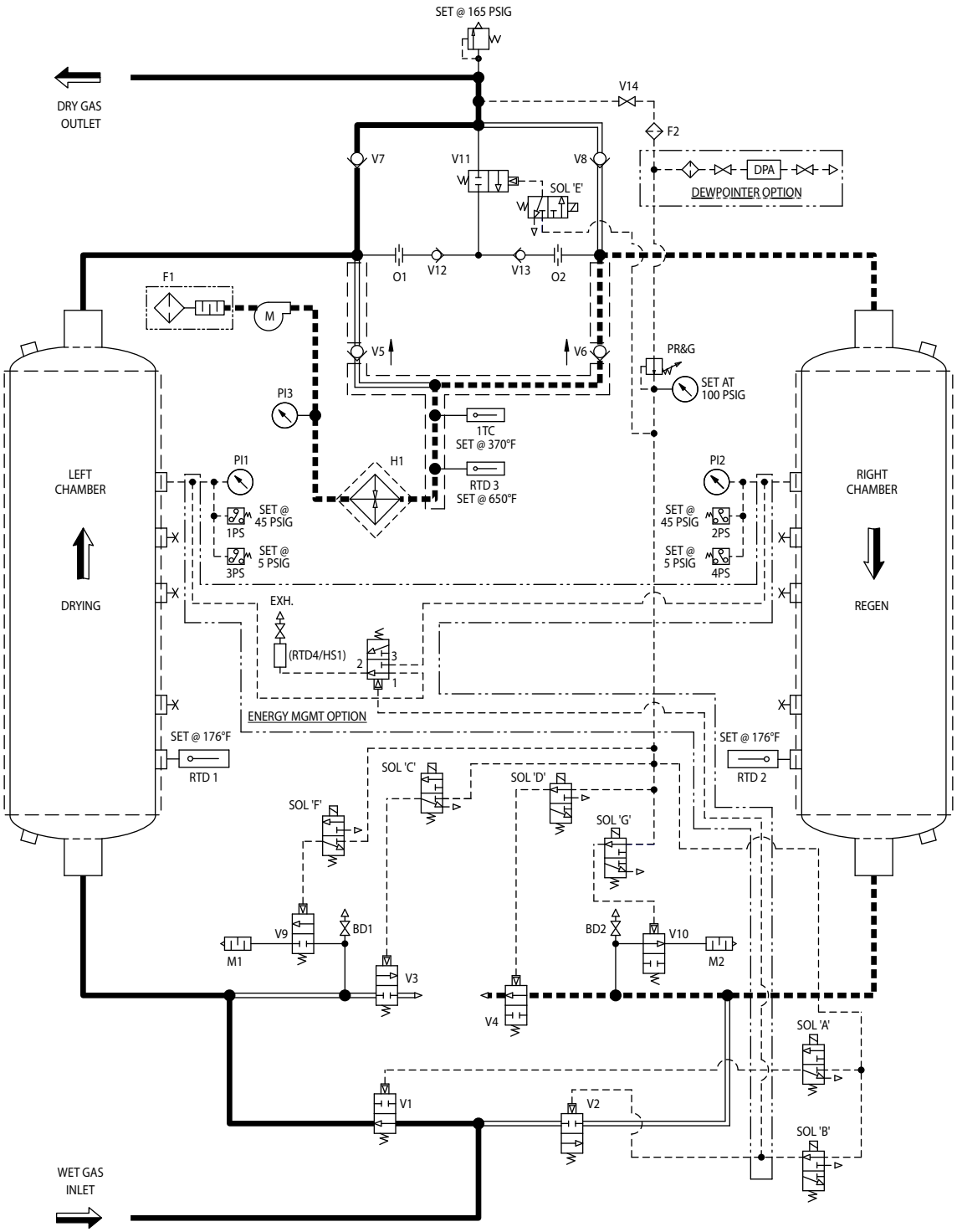

NOTES

1. SYMBOLS ARE PER ANSI Y32.10 "GRAPHIC SYMBOLS FOR FLUID POWER DIAGRAMS."
2. AS SHOWN FLOW DIRECTION IS:
   - LEFT CHAMBER DRYING
   - RIGHT CHAMBER REGEN
   - PILOT GAS LINE
3. SOLENOID VALVES 'B', 'D', & 'G' ARE SHOWN ENERGIZED, SOLENOID VALVES 'A', 'C', 'E', & 'F' ARE SHOWN DE-ENERGIZED.
4. INDICATES OPTION

Figure 4
Sequence of Operation — Fixed Cycle Operation
Left Chamber Drying – Right Chamber Regenerating (shown)
(continued on next page)

from entering the dryer. The Blower **M** and Heater **H1** are de-energized when the temperature at the bottom of the left tower, as sensed by the Left Tower Temperature Sensor **RTD1**, reaches the Heat Termination set point. This indicates that the bed has been fully heated.

The Repressurization Valve **V11** is opened. A portion of the dry air from the right tower now flows through Repressurization Valve **V11**. This air is throttled to near atmospheric pressure by Repressurization/ Sweep Orifice **O1**. The dry, low pressure air flows down through the left tower cooling the desiccant bed, and exits through the Left Tower Purge Exhaust Valve **V3.**

The Cooling Step continues until:

a) the left tower bed temperature falls to 150°F or,

b) it is time to repressurize the left tower,

whichever occurs first.

NOTE: In fixed cycle, the bed will normally be partially cooled because the repressurization step will occur before the bed temperature can fall to 150°F.

NOTE: In Energy Management or Dew Point Control, as the drying time extends beyond 4 hours, additional cooling time becomes available thus the cooling step will frequently terminate based on temperature providing complete bed cooling.

At the end of the Cooling Step, the Left Tower Purge Exhaust Valve **V3** is closed. The left tower slowly repressurizes to full line pressure and is ready to go back on-line.

NOTE: Bed cooling can be disabled by moving JP4 to the “ON” position.

6.3.1 Energy Management Control (optional)

Operation of the Energy Management Control cycle is identical to the fixed cycle except the cycle is extended until the desiccant bed in the on-line tower has been fully utilized. The off-line tower is regenerated and remains in a stand-by mode after being repressurized.

Figure 5 shows the air sampling system for the Energy Management System – EMS option. A 3-way pilot valve directs an air sample from the drying tower to the EMS sensor. The EMS sensor detects the relative humidity and temperature of the air sample. The air sample then exhausts to atmosphere. The drying tower remains on-line until the moisture front arrives at the sensor.

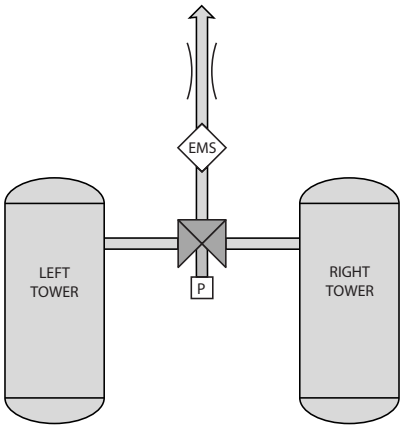

Figure 5
Optional Moisture Sensing
Energy Management System (EMS)

6.4 Control Board Jumpers

In the upper left hand corner of the control board there are eight two-pin jumpers labeled JP1 through JP8. Only six of the eight jumper pairs are utilized. Pairs JP7-JP8 are used for factory settings and testing. **NOTE: Do not install jumpers in the ON position on pairs JP7 through JP8.** The jumper is a removable bridge that is used to make or break continuity between two pins that form a pair. When installed in the ON position, the jumper is place on both pins of the pair and continuity between the pins is established. When installed in the OFF position, the jumper is removed or stored on a single pin and continuity is broken. Jumper functions are as follows:

1. **JP1 – Dryer Type**
   Jumper JP1 is used to select the dryer type configuration. It is installed in the ON position for Blower Purge dryer configuration.
2. **JP2 – Energy Management**
   Jumper JP2 is installed in the ON position when an Energy Management sensor is installed. The jumper is installed in the OFF position when no Energy Management sensor is installed.
3. **JP3 – Dew Point Transmitter**
   Jumper JP3 is installed in the ON position when a Dew Point Transmitter is installed. The jumper is installed in the OFF position when no Dew Point Transmitter is installed.

   NOTE: "Energy Management" can co-exist with the dew point transmitter option. Dryer control based on the ENERGY MANAGEMENT or DEWPOINT CONTROL is selected on Screen 1 of the Set Up Mode.

   If DEWPOINT CONTROL is not selected then the dew point signal does not control the dryer cycle but still serves a monitoring and alarm function.
4. **JP4 – Cooling Cycle**
   Jumper JP4 is installed in the ON position to disable the Cooling Cycle. The jumper is installed in the OFF position to enable a Cooling Cycle.
5. **JP5 – Switching Failure**
   Jumper JP5 is installed in the ON position to enable Switching Failure. The jumper is installed in the OFF position if Switching Failure is disabled.
6. **JP6 – Common Alarm**
   Jumper JP6 is installed in the OFF position to enable both the dryer fault alarms and service alarms to activate the common alarm. This is the default configuration. Install jumper JP6 in the ON position if the common alarm is to activated by a dryer fault alarm only.

   NOTE: Jumpers JP7 and JP8 are used by the factory during final inspection to download language text and to enable 'factory' set-up screens.
7. **JP7 – Download Language Text**
   Jumper JP7 is factory installed in the OFF position to disable Language Text download. The jumper is installed in the ON position to allow for language text download due to either language corrections or new language installation.
8. **JP8 – Set Up**
   Jumper JP8 is factory installed in the OFF position to disable access to "factory" set up screens. The jumper is installed in the ON position during final inspection at the factory to set controller to match customer requirements.

6.5 Operator Interface

Refer to *Figure 6 , Front Panel Overlay* for information regarding the location and function of the LEDs, switches, and text display.

6.5.1 Front Panel LED's

- Power On - green
- Alarm - red
- Service / Maintenance reminder - amber
- Filters (pre, after, and pilot) service / maintenance reminders - amber
- Inlet switching and purge / repressurization valve status (On = valve open; Off = valve closed) - green
- Left and right tower status (heating) - amber
- Left and right tower status (drying) - green
- Left and right tower pressure switch status (On = switch closed; Off = switch open) - green

6.5.2 Front Panel Switches

The front panel contains four momentary-contact push-button switches. Refer to Figure 6, Front Panel Overlay for the appropriate icon associated with each switch. Pushing on the overlay icon actuates the switch.

Data Display Switch
This switch is used to step through the display screens.

Select Switch
This button is located to the left of the text display window. Refer to the Front Panel Operation Section for additional information.

ENTER Switch
This button is located to the right of the text display window. Refer to the Front Panel Operation Section for additional information.

Alarm Reset Switch
This button is normally used to reset an alarm or service reminder. Refer to the Front Panel Operation Section for additional information.

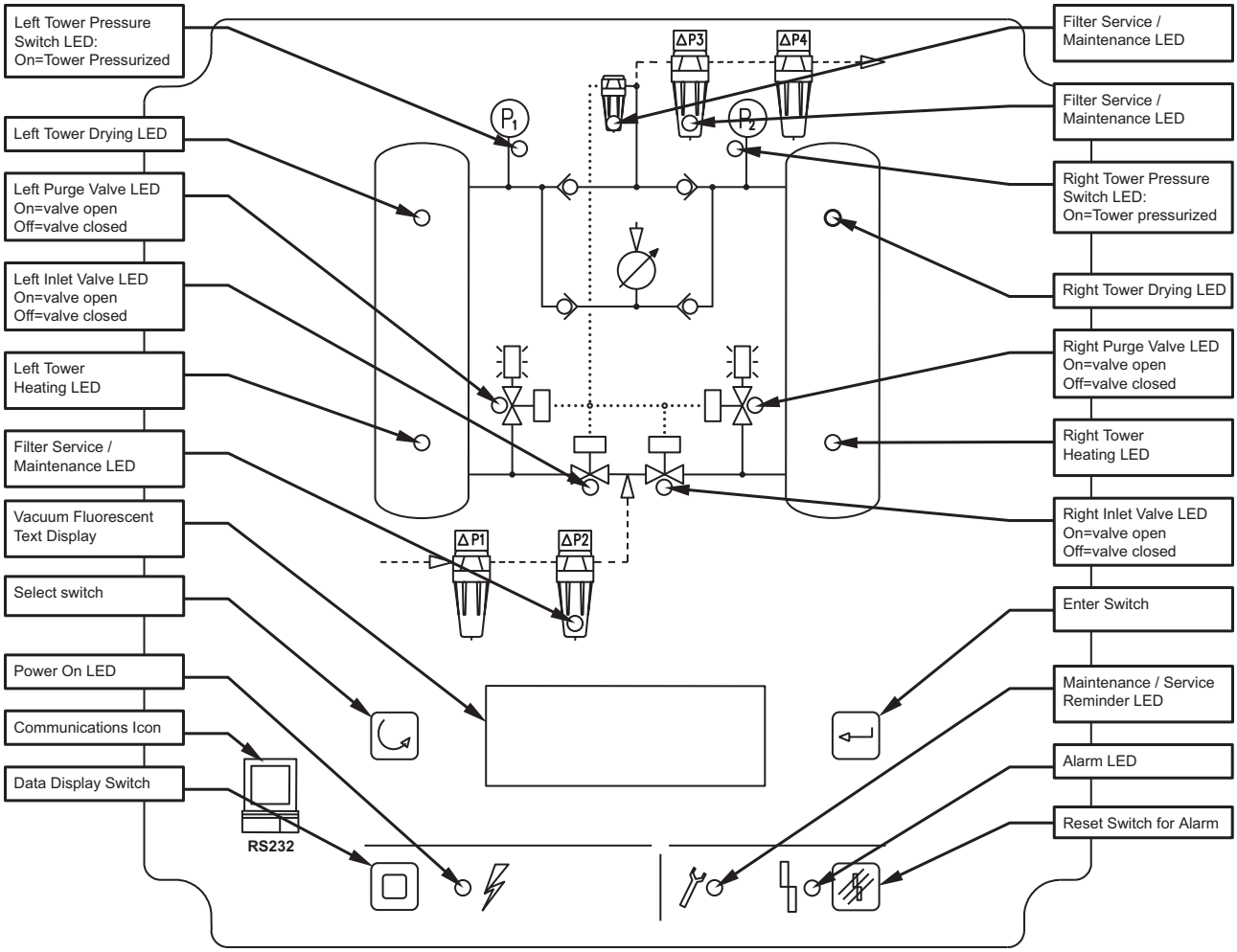

Figure 6
Front Panel Overlay

6.5.3 Front Panel Operation

1. There are five operating modes for the Heated Desiccant Dryer Control.
   a. Program Mode
   b. Setup Mode
   c. Alarm & Service Mode
   d. Display Mode
   e. Test Mode
2. Each Mode is described below.

6.5.4 Program Mode

1. Press and hold ↵ and ◐ for 3 seconds to enter Program Mode.
2. Program Mode is comprised of the screens that are described below.
3. There are three (3) ways to exit Program Mode.
   a. Press ↵ after making the selection in the final screen.
   b. At any screen, press and hold ↵ for 3 seconds.
   c. The controller automatically exits Program Mode if no button is pressed within 60 seconds.
4. Upon exiting Program Mode the controller will switch to Display Mode.

Screen 1: Select the Language

ENGLISH

1. Press ◐ to scroll through the choices: ENGLISH, FRANCAIS and ESPANOL.
2. When finished, press ↵ to save the selection and move to next screen.

Screen 2: Select the Service Level

SERVICE LEVEL
NORMAL

1. Press ◐ to toggle between NORMAL and SEVERE.
   a. NORMAL Service Intervals are:
      i. 4000 hours for filters
      ii. 8000 hours for desiccant
      iii. 8000 hours for valves

b. SEVERE Service Intervals are:
   i. 2000 hours for filters
   ii. 4000 hours for desiccant
   iii. 4000 hours for valves

2. When finished, press ↵ to save the selection and move to next screen.

Screen 3: Reset the Timer for Filter Service

FILTER SERVICE
RESET? NO

1. Press ◡ to toggle between NO and YES.
2. When finished, press ↵ to acknowledge the selection and move to next screen.

Screen 4: Reset the Timer for Desiccant Service

DESICCANT SERVICE
RESET? NO

1. Press ◡ to toggle between NO and YES.
2. When finished, press ↵ to acknowledge the selection and move to next screen.

Screen 5: Reset the Timer for Valve Service

VALVE SERVICE
RESET? NO

1. Press ◡ to toggle between NO and YES.
2. When finished, press ↵ to acknowledge the selection and move to next screen.

Screen 6: Set Alarm Point for the Dew Point Sensor (This feature is only active when JP3 is "on")

DEWPOINT ALARM	
±XX°C	±XXX°F
XX MIN SW DELAY	

1. Press ◡ to increment the setting to the desired value.
   a. Standard set point is -20°C -4°F.
   b. The allowable range of values is from -80°C -112°F to +10°C +50°F in 5°C/9°F increments.
2. When finished, press ↵ to acknowledge the selection and scroll to the switchover delay set point screen.
   a. Standard set point is 60 MIN.
   b. The allowable range of values are 30 to 120 MIN in 10 minute increments.
3. When finished, press ↵ to acknowledge the selection and move to next screen. Exit Program Mode when there are no more active screens to display.

Screen 7: Set Point for Dew Point Demand Control (This feature is only active when JP3 is "on")

DPNT CNTL SETPT	
±XX°C	±XXX°F

1. Press ◡ to increment the setting to the desired value.
   a. Standard set point is -30°C -22°F.
   b. The allowable range of values is from -80°C -112°F to +10°C +50°F in 5°C/9°F increments.

   NOTE: Must be set "drier" than Dew Point Sensor Alarm Set Point (screen 6).
2. When finished, press ↵ to acknowledge the selection and exit the Program Mode.

Screen 8: Set the Heat Termination Set Point

HEAT TERM SET-PT	
XX°C	XXX°F

1. Press ◡ to increment the setting to the desired temperature value.
   a. Refer to P&ID diagrams in the back of this manual for Heat Termination set points (see set point values for RTD1 and RTD2).
   b. The allowable range of values are: 60° - 160°C 140° - 320°F in 10°C increments.
2. When finished, press ↵ to acknowledge the selection and move to next screen. Exit Program Mode when there are no more active screens to display.

Screen 9: Set the Sweep Termination Set Point

SWEEP TERM SET-PT	
XX°C	XXX°F

1. Press ◡ to increment the setting to the desired temperature value.

   The allowable range of values are: 48° - 60°C 118° - 150°F in 2°C increments.
2. When finished, press ↵ to acknowledge the selection and move to next screen. Exit Program Mode when there are no more active screens to display.

Screen 10: Set Points for Energy Management (This feature is only active when JP2 is "on")

ENRGY MGMT SETPT
XX%RH
XX MBAR .XXX PSI

1. Press ◡ to increment the setting to the desired maximum RH value.
   a. Factory set point is 60%RH. The factory setting should not require adjustment.
   b. The allowable range of values are 20 to 80%RH in 5% increments.

2. When finished, press ↵ to acknowledge the selection and scroll to the pressure set point screen.

3. Press ◡ to increment the setting to the desired maximum vapor pressure value.
   a. Standard set point for a -40°F dew point dryer is 16 MBAR (0.232 PSI).

      NOTE: Standard set point for a -100°F dew point dryer is 4 MBAR (0.058 PSI).
   b. The allowable range of values is 3 to 34 MBAR (0.044 to 0.493 PSI) in 1 MBAR increments.
   c. This setting may be field adjusted to increase or decrease the outlet dew point at tower switchover.

4. When finished, press ↵ to acknowledge the selection and move to next screen.

Screen 11: Set Points for High Humidity Alarm

(This feature is only active when JP2 is "on")

HIGH HUMIDITY
XX%RH
XX MBAR .XXX PSI
XX MIN SW DELAY

1. Press ◡ to increment the setting to the desired maximum RH value.
   a. Factory set point is 75%RH. The factory setting should not require adjustment.
   b. The allowable range of values are 20 TO 80%RH in 5% increments.

      NOTE: Value must be set above Energy Management Maximum RH Value Set Point (screen 9).

2. When finished, press ↵ to acknowledge the selection and scroll to the pressure set point screen.

3. Press ◡ to increment the setting to the desired maximum vapor pressure value.
   a. Factory set point for a -40°F dew point dryer is 24 MBAR (0.348 PSI).

      NOTE: Factory set point for a -100°F dew point dryer is 5 MBAR (0.073 PSI).
   b. The allowable range of values is 3 to 34 MBAR (0.044 to 0.493 PSI) in 1 MBAR increments.

      NOTE: Value must be set above Energy Management Maximum Vapor Pressure Set Point (screen 9).

4. When finished, press ↵ to acknowledge the selection and scroll to the switchover delay set point screen.
   a. Factory set point is 60 MIN.
   b. The allowable range of values are 30 to 120 MIN in 10 minute increments.

5. When finished, press ↵ to acknowledge the selection and move to next screen. Exit Program Mode when there are no more active screens to display.

6.5.5 Setup Mode

1. Press and hold ↵ for 3 seconds to enter Setup Mode.

2. Setup Mode is comprised of the screens that are described below.

3. There are two ways to exit Setup Mode.
   a. Press ↵ after making the selection in Screen 1.
   b. The controller automatically exits Setup Mode if no button is pressed with 60 seconds.

4. One of two things will happen upon exiting Setup Mode.
   a. The controller will switch to Display Mode if ENERGY MANAGEMNT, FIXED CYCLE or DEWPOINT CONTROL is selected.
   b. The controller will switch to Test Mode if TEST CYCLE is selected.

Screen 1: Select the Cycle Type

CYCLE TYPE
ENERGY MANAGEMNT

1. Press ◡ to scroll through the choices:
   a. ENERGY MANAGEMNT (displayed only when JP2 is in the ON position)
   b. DEWPOINT CONTROL (displayed only when JP3 is in the ON position)
   c. FIXED CYCLE
   d. MANUAL CYCLE

2. When finished, press ↵ to save the selection and exit the Setup Mode.

6.5.6 Alarm & Service Mode

1. Alarm & Service Mode is active when the controller is in Display Mode. It is not active in Program Mode, Setup Mode, or Test Mode.
2. Local alarm consists of a blinking alarm LED and an alarm message display.
3. Alarm messages have priority over Service messages. Service messages have priority over Display Messages.
4. After an alarm condition has been corrected, if:
   a. Alarm is "self-clearing" then,
      i. The alarm LED stops blinking (LED on); the alarm message continues to be displayed.
      ii. The alarm reset button must be depressed to clear the alarm LED (LED off) and the alarm message.
   b. Alarm must be manually reset, then:
      i. The alarm LED continues to blink and the alarm message continues to be displayed.
      ii. The alarm reset button must be depressed to:
         1. Clear the alarm LED (LED off)
         2. Clear the alarm message and
         3. Restart the dryer cycle.
5. When an alarm condition has not been corrected and the "alarm reset" button is pressed, the alarm will not clear except as follows:
   a. The alarm conditions will clear for 5 seconds, then reappear if the alarm condition persists, this applies to the following alarms:
      i. Heater: High Inlet Temperature.
      ii. Heater: Low Temperature
      iii. Humidity Sensor: High Humidity Alarm
      iv. Humidity Sensor: Under-Range or Over-Range Alarm
      v. Dew Point Sensor: High Dew Point Alarm
      vi. Dew Point Sensor: Under-Range or Over-Range Alarm
6. There are three alarms for each tower that are triggered by the tower pressure switches. These alarms can occur in any operating mode (Manual, Fixed, Energy Management, or Dew Point Demand Cycle).

   Following is a brief description of each alarm.

   a. Left or Right tower, drying, low pressure
      i. Drying tower pressure switch is open during the drying cycle.
   b. Left or Right tower, regenerating, high pressure
      i. Regenerating tower pressure switch is closed while purge valve is open (after an initial time delay).
   c. Left or Right tower, regenerating, low pressure
      i. Regenerating tower pressure switch is open at the end of the regenerating cycle.
   d. On alarm condition, the blower and heater are de-energize, the cycle sequence is stopped, a local alarm is displayed and the common alarm relay is de-energized.
   e. These alarms are self-clearing.
7. Heater High Inlet Temperature
   a. Model sizes 3200, 3600 and 4300 are equipped with a temperature switch located in the piping between the blower and heater.
   b. If during the Heat Cycle this temperature switch opens, indicating a rise in temperature above the factory setting (refer to Electrical Schematic drawings at the back of this manual for set point), an alarm is activated.
   c. On alarm condition, the blower and heater are de-energized, the cycle sequence is stopped, a local alarm is displayed and the common alarm relay is de-energized.
   d. This alarm must be manually reset.
8. The dryer is equipped with RTD temperature sensors. There are out of range alarms for each.
   a. The standard left tower, right tower, and heater RTDs (RTD1, RTD2, RTD3) are scaled from -20°F(-28°C) to 890°F (477°C), "Out of Range" conditions are as follows:
      i. Over-range - temperature above 850°F (454°C)
      ii. Under-range - temperature below -20°F (-28°C)
      iii. NOTE: The controller will annunciate a "Heater Overtemperature" alarm in lieu of an "Over Range" alarm when the heater sensor is disconnected.
   b. The Energy Management RTD4 is scaled from -20°F(-28°C) to 429°F(220°C), "Out of Range" conditions are as follows:
      i. Over-range - temperatures above 400°F (204°C)
      ii. Under-range - temperatures below -20°F (-28°C)
   c. On alarm condition, a local alarm is displayed and the common alarm relay is de-energized.
   d. Over-range and Under-range alarms are self-clearing.
9. Heat Low Temperature
   a. RTD3 is used to detect Heater Low Temperature.
   b. Alarm if the heater temperature is less than 250°F (121°C) within 15 minutes after the Heat Cycle is initiated (15 minute delay also applies after power recovery).
   c. On alarm condition, display local alarm and de-energize common alarm relay.
   d. This alarm is self-clearing.

ALARM MESSAGES

LEFT TOWER ALARMS	RIGHT TOWER ALARMS	OTHER ALARMS
ALARM LEFT TOWER DRYING LOW PRESSURE	ALARM RIGHT TWR DRYING LOW PRESSURE	ALARM HEATER OVER-TEMPERATURE
ALARM LEFT TOWER REGENERATING HIGH PRESSURE	ALARM RIGHT TWR REGENERATING HIGH PRESSURE	ALARM HEATER LOW TEMPERATURE
ALARM LEFT TOWER REGENERATING LOW PRESSURE	ALARM RIGHT TWR REGENERATING LOW PRESSURE	ALARM ENRGY MGNT UNDER-RANGE
ALARM LEFT TOWER TEMP UNDER-RANGE	ALARM RIGHT TWR TEMP UNDER-RANGE	ALARM ENRGY MGNT OVER-RANGE
ALARM LEFT TOWER TEMP OVER-RANGE	ALARM RIGHT TWR TEMP OVER-RANGE	ALARM BLOWER MOTOR OVERLOAD
ALARM LEFT TOWER OUTLET DEW POINT	ALARM RIGHT TWR OUTLET DEW POINT	ALARM HEATER HIGH TEMP IN
ALARM LEFT TOWER HIGH HUMIDITY	ALARM RIGHT TWR HIGH HUMIDITY	
ALARM LEFT TOWER DEW POINT UNDER-RANGE	ALARM RIGHT TWR DEW POINT UNDER-RANGE	
ALARM LEFT TOWER DEW POINT OVER-RANGE	ALARM RIGHT TWR DEW POINT OVER-RANGE	

10. Heater Over-Temperature
    a. RTD3 is used to detect Heater Over-Temperature.
    b. Alarms anytime that the Heater temperature exceeds 650°F (343°C).
    c. On alarm condition, de-energize heat cycle, stop cycle sequence, display local alarm and de-energize common alarm relay.
    d. This alarm must be manually reset.
11. Blower Overload
    a. Alarm condition when blower overload contact closes.
    b. On alarm condition, de-energize heat cycle, stop cycle sequence, display local alarm and de-energize common alarm relay.
    c. This alarm must be manually reset.

Alarms for Optional Devices

12. Energy Management -
    a. High Humidity Alarm:
        i. Measured moisture level exceeds the air alarm value entered through the Program Mode.
    b. Humidity Sensor:
        i. Under-range: RH% < -15%
        ii. Over-range: RH% > 115%
    c. RTD:
        i. Over-range: Temperature above 448°F (231°C)
        ii. Under-range: Temperature below -20°F (-28°C)
    d. On alarm condition:
        i. Local alarm is displayed and the common alarm relay is de-energized.
        ii. If the dryer is set up for Energy Management Control, the dryer sequence continues, but bypasses the “HOLD” step and proceeds to tower switchover after 4 hours of drying.
        iii. This alarm is self-clearing, at which time the alarm LED stops blinking and control switches back to Energy Management control.
13. Dew Point Sensor
    a. High Dewpoint Alarm
        i. The user enters an alarm value through the Program Mode.
        ii. If the measured dew point exceeds the alarm value, the outlet dew point alarm is indicated.
    b. Under-range alarm - Dew point below -148°F (-100°C)
    c. Over-range alarm - Dew point greater than +109°F (+43°C)
    d. On alarm condition,
        i. Local alarm is displayed and the common alarm relay is de-energized.
        ii. If dryer is set up for Dewpoint Control, the dryer sequence continues, but bypasses the “HOLD” step and proceeds to tower switchover after 4 hours of drying.
        iii. This alarm is self-clearing, at which time the alarm LED stops blinking and control switches back to Dewpoint Control.

Service Due Messages

14. There are two service levels (normal and severe) as described in Program Mode. Each service level has preset time intervals for servicing the filters, desiccant, and valves. Time continues to accumulate as long as power is supplied to the controller, whether the controller is switched on or off.

    When a service time interval expires (see also 14.d below), the controller operates as follows.

    a. The service LED blinks and the appropriate service message is shown on the text display.

        i. When the service interval for filters has expired (see also d below), the three filter LED's also blink.

    b. The dryer continues to cycle normally. The LED's for the valve's, pressure switches, and desiccant towers are not used for service indication.

    c. Press the Reset button to extinguish the service LED and to clear the service message from the text display.

    d. If the dryer has 1 or 2 filter monitors, the timer for filter service is disabled. When the filter monitor(s) send an alarm signal (change filter) to the controller, the controller displays the same LED's and messages it would if the timer for filter service had expired.

15. Examples of the text display are shown on page 18 and below for each alarm and service reminder. The second line of the alarm screens contains up to three messages which are scrolled through, displaying each one for 2 seconds.

SERVICE DUE MESSAGES

SERVICE DRYER
FILTERS

SERVICE DRYER
DESICCANT

SERVICE DRYER
VALVES

6.5.7 Display Mode

1. Display Mode is active when the user exits Program Mode or Setup Mode and no alarms are active (unless MANUAL CYCLE was selected in Setup Mode).
2. Display Mode is comprised of dryer status screens and dryer display screens (described below). The controller automatically alternates the display between the **Status Screens** and **selected Display Screens**.
3. The user can override the automatic screen scroll by pressing ▢ to step through each of the **Display Screens** shown on the next page. Automatic scrolling will resume when ◡ is pressed or if ▢ not depressed for 60 seconds.
4. The Energy Savings and Service Reminders Display Screens (Filters, Desiccant, and Valves) are alternated in sequence with the current dryer status screen.

DRYER STATUS SCREENS

LEFT TOWER DRYING

LT DRYING
RT DEPRESSURIZE

LT DRYING
RT HEATING

LT DRYING
RT COOLING

LT DRYING
RT REPRESSURIZE

LT DRYING
RT HOLDING

(Not displayed in FIXED Cycle)

TOWER SWITCHOVER

RIGHT TOWER DRYING

LT DEPRESSURIZE
RT DRYING

LT HEATING
RT DRYING

LT COOLING
RT DRYING

LT REPRESSURIZE
RT DRYING

LT HOLDING
RT DRYING

(Not displayed in FIXED Cycle)

TOWER SWITCHOVER

DRYER DISPLAY SCREENS

Energy Savings
(Not displayed in FIXED Cycle)

ENERGY SAVINGS
XX%

NOTE: Energy Savings will appear after seven days of continuous use.

Service reminder (filters)

HOURS TO SERVICE
FILTERS: XXXX

Service reminder (desiccant)

HOURS TO SERVICE
DESICCANT: XXXX

Service reminder (valves)

HOURS TO SERVICE
VALVES: XXXX

Outlet Dew Point
(Displayed only if JP3 is ON)

DEW POINT
±XX°C ±XXX°F

Left Tower Temperature

LT TEMP
±XX°C ±XXX°F

Right Tower Temperature

RT TEMP
±XX°C ±XXX°F

Heater Temperature

HEATER TEMP
±XX°C ±XXX°F

Dewpoint Demand SetPoint
(Displayed only if JP3 is ON)

DWPT CNTL SETPT
±XX°C ±XXX°F

Energy Mgmt Signal
(Displayed only if JP2 is ON)

ENERGY MGMT SGNL
XX%RH XXX°F XX°C
XX MBAR X.XX PSI

Energy Mgmt Setpoint
(Displayed only if JP2 is ON)

ENERGY MGMT SET
XX MBAR X.XX PSI

(This is the calculated “hold” set-point, which is based on the sample air temperature.)

6.5.8 Test Mode

1. Test Mode is active when the user exits Program Mode after selecting operation in MANUAL CYCLE.
2. Test Mode is comprised of twelve (12) screens (screen descriptions follow the table below on the next page). Each screen corresponds to one of twelve program steps (described in the table below).
3. Press to advance from one screen (test step) to the next.

   IMPORTANT: Be sure to read and understand all cautions listed with the screen (program step) descriptions.
4. Upon entering Test Mode, the program can be at any one of the twelve steps.
5. To exit Test Mode:
   a. Press and hold for 3 seconds to exit Test Mode. The display switches to Screen 2 of Setup Mode.
   b. Use to select ENERGY MANAGEMENT, DEWPOINT CONTROL or FIXED CYCLE.
   c. Press and hold for 3 seconds to exit Setup Mode and activate Display Mode.
   d. Dryer operation continues from the last step active when exiting the Test Mode.

Program Step	1	2	3	4	5	6	7	8	9	10	11	12
LT status	Drying	Drying	Drying	Drying	Drying	Drying	Off	Depress	Heat	Cool Down	Sweep	Repress
RT status	Off	Depress	Heat	Cool Down	Sweep	Repress	Drying	Drying	Drying	Drying	Drying	Drying
1PS	Closed	Closed	Closed	Closed	Closed	Closed	Closed	Closed then Open	Open	Open	Open	Open then Closed
2PS	Closed	Closed then Open	Open	Open	Open	Open then Closed	Closed	Closed	Closed	Closed	Closed	Closed
3PS	Closed	Closed	Closed	Closed	Closed	Closed	Closed	Closed then Open	Open	Open	Open	Open then Closed
4PS	Closed	Closed then Open	Open	Open	Open	Open then Closed	Closed	Closed	Closed	Closed	Closed	Closed
LT drying solenoid (B)	On	On	On	On	On	On	Off	Off	Off	Off	Off	Off
LT depress solenoid (F)	Off	Off	Off	Off	Off	Off	Off	On	On	On	On	Off
LT purge solenoid (C)	Off	Off	Off	Off	Off	Off	Off	Off	On	On	On	Off
RT drying solenoid (A)	Off	Off	Off	Off	Off	Off	On	On	On	On	On	On
RT depress solenoid (G)	Off	On	On	On	On	Off	Off	Off	Off	Off	Off	Off
RT purge solenoid (D)	Off	Off	On	On	On	Off	Off	Off	Off	Off	Off	Off
LT inlet valve (V1)	Open	Open	Open	Open	Open	Open	Closed	Closed	Closed	Closed	Closed	Closed
LT depress valve (V9)	Closed	Closed	Closed	Closed	Closed	Closed	Closed	Open	Open	Open	Open	Closed
LT purge valve (V3)	Closed	Closed	Closed	Closed	Closed	Closed	Closed	Closed	Open	Open	Open	Closed
RT inlet valve (V2)	Closed	Closed	Closed	Closed	Closed	Closed	Open	Open	Open	Open	Open	Open
RT depress valve (V10)	Closed	Open	Open	Open	Open	Closed	Closed	Closed	Closed	Closed	Closed	Closed
RT purge valve (V4)	Closed	Open	Open	Open	Open	Closed	Closed	Closed	Closed	Closed	Closed	Closed
Repress valve (V11)	Closed	Closed	Closed	Closed	Open	Open	Closed	Closed	Closed	Closed	Open	Open
Temp display - location	Left	Right	Right	Right	Right	Right	Right	Left	Left	Left	Left	Left

Table 2
Cycle Sequence Steps

TEST MODE SCREENS

Screen 1: Step 1

TEST1: LT DRYING
LT: XX°C XXX°F

Screen 2: Step 2

TEST2: DEPR RT
RT: XX°C XXX°F

NOTE: Sequence step will not advance to HEAT until tower has fully depressurized. Exception: If switching failure is disabled then pressure condition is ignored.

Screen 3: Step 3

TEST3: HEAT RT
RT: XX°C XXX°F

Screen 4: Step 4

TEST4: COOL RT
RT: XX°C XXX°F

Screen 5: Step 5

TEST5: SWEEP RT
RT: XX°C XXX°F

NOTE: If sweep cycle is disabled then Test 5 is ignored.

Screen 6: Step 6

TEST6: REPR RT
RT: XX°C XXX°F

NOTE: Sequence step will not advance to tower SWITCHOVER until tower has fully pressurized. Exception: If switching failure is disabled then pressure condition is ignored.

Screen 7: Step 7

TEST7: RT DRYING
RT: XX°C XXX°F

Screen 8: Step 8

TEST8: DEPR LT
LT: XX°C XXX°F

NOTE: Sequence step will not advance to HEAT until tower has fully depressurized. Exception: If switching failure is disabled then pressure condition is ignored.

Screen 9: Step 9

TEST9: HEAT LT
LT: XX°C XXX°F

Screen 10: Step 10

TEST10: COOL LT
LT: XX°C XXX°F

Screen 11: Step 11

TEST11: SWEEP LT
LT: XX°C XXX°F

NOTE: If sweep cycle is disabled then Test 10 is ignored.

Screen 12: Step 12

TEST12: REPR LT
LT: XX°C XXX°F

NOTE: Sequence step will not advance to tower SWITCHOVER until tower has fully pressurized. Exception: If switching failure is disabled then pressure condition is ignored.

6.6 Start-up

6.6.1 Controller Settings

Set or verify settings on Controller. Detailed operational points are presented in section 6.5.

WARNING - Enclosure may have live electric parts. De-energize dryer before opening enclosure.

6.6.2 Initial Pressurization

SLOWLY pressurize dryer to full line pressure. (If the dryer was installed with inlet and outlet isolation valves, the inlet isolation valve should be slowly opened while the outlet isolation valve remains closed.)

During initial start-up, check the entire system for leaks. If necessary, de-pressurize the dryer and correct any leaks.

6.6.2.1 Energy Management Sensor (if installed)

Open and adjust the sample exhaust valve until a very slight, continuous gas bleed is felt exhausting out of the sample cell.

6.6.2.2 Dew Point Sensor (if installed)

Ensure that the supply air valve is open (one turn). Open and adjust the sample exhaust valve until a very slight, continuous gas bleed is felt exhausting out of the sample cell.

6.6.3 Energizing the Dryer

Energize the dryer controls.

NOTE: The switching failure alarm may be activated if the unit is energized before it is pressurized. To deactivate alarm, allow dryer to cycle to next step and press the reset button.

6.6.4 Bringing the Dryer On-line

Establish a normal flow through the dryer. Slowly open the outlet isolation valve if present. Close any dryer bypass valves.

6.7 Operational Check Points

6.7.1 Power to unit

Check periodically that there is power to the unit (indicating lights illuminated).

6.7.2 Alarms

Periodically check for flashing red alarm LED.

6.7.3 Tower Status LEDs

Illuminated LEDs indicate which tower is on-line drying or off-line regenerating.

6.7.4 Tower Pressure Gauges

Periodically check tower pressure gauges to verify that the pressure gauge of the on-line tower reads line pressure and the pressure gauge of the off-line tower reads below 2 psig (0.14 kgf/ cm^2).

NOTE: Read the off-line tower pressure gauge when the tower is purging (air exhausting from muffler).

6.7.5 Process Valves

Determine if air control valves are operating and sequencing correctly.

6.7.5.1 Valves – Models 500 and 600

Inlet switching valves are normally open, pneumatically piston-actuated, Y-angle poppet valves. A yellow indicator can be seen through a clear window at the top of the actuator housing when the valve is in the open position.

Purge exhaust valves are normally closed, pneumatically piston-actuated, Y-angle poppet valves. A yellow indicator can be seen through a clear window at the top of the actuator housing when the valve is in the open position.

12 volt DC, normally-closed, 3-way pilot solenoid valves are wired to the controller and are used to direct pilot air to the actuators of the inlet switching and purge/repressurization valves.

Dryers are equipped with a safety relief valve that has been sized to provide overpressure protection due to a fire for both desiccant towers.

6.7.5.2 Valves – Models 750 through 4300

Inlet switching valves are resilient seated butterfly valves with double acting pneumatic rack and pinion actuators. A yellow arrow indicator located on the top of the actuator output shaft points to valve position indicator icons. Pilot air is directed to actuator ports to open both inlet valves upon loss of power.

(Model 750 only) Purge exhaust valves are normally closed, pneumatically piston-actuated, Y-angle poppet valves. A yellow indicator can be seen through a clear window at the top of the actuator housing when the valve is in the open position.

(Models 900 through 4300) Purge exhaust valves are resilient seated butterfly valves with spring return, fail closed, pneumatic rack and pinion actuators. A yellow arrow indicator located on the top of the actuator output shaft points to valve position indicator icons. Pilot air is directed to actuator ports to close both purge/repressurization valves upon loss of power.

12 volt DC, single solenoid, 4-way pilot valves are wired to the controller and are used to direct pilot air to the actuators of the inlet switching and purge/repressurization valves.

Two mainline outlet and two purge line check valves are installed in the upper piping to control the flow of outlet and purge air. Check valve sticking will result in excessive air discharge through a muffler. Excessive air discharge through the muffler can be associated with a leaking outlet check valve on the same side or a purge check valve of the opposite side tower.

Dryers are equipped with a safety relief valve that has been sized to provide overpressure protection due to a fire for both desiccant towers.

The tower pressure gauge of the on-line tower should read line pressure. Air should not be leaking from the purge-repressurization valve of the on-line tower.

The tower pressure gauge of the off-line tower should read below 2 psig (0.14 kgf/ cm^2) while that tower is purging. If excessive air is exhausting during the purge cycle, the inlet-switching valve on the same side may have failed to close or a check valve may be sticking.

6.8 Dryer Shut Down

1. If the dryer installation is equipped with dryer bypass and inlet and outlet isolation valves, the bypass valve should be opened and the inlet and outlet isolation valves closed.
2. De-energize the dryer's electrical supply.
3. SLOWLY open the tower blow down valves (refer to Figure 3 for general location) to vent the dryer internal pressure.
4. When all dryer pressure gauges indicate zero pressure, close the tower blow down valves. Depressurization is complete.

6.9 Loss of Power

Control valves are designed so that upon loss of power the air dryer is capable of drying air until the desiccant exposed to the airflow is saturated.

6.9.1 Power Recovery:

6.9.1.1 On loss of electrical power –

All controller outputs turn off causing the dryer operating valves to react as follows:

1a. For models with poppet style inlet valves (models 500 - 600): both inlet valves will open. Both towers will repressurize.

1b. For models with butterfly inlet valves (models 750 - 4300): inlet valves will remain in position. Any minor leakage through the inlet valve or check valve will slowly repressurize the off-line tower.

2. Purge exhaust valves close.
3. Depressurization solenoid valves close.
4. Repressurization valve closes.

6.9.1.2 On restoration of power –

1. If power is lost when the off-line tower is in either the HEAT or COOL step, the off-line tower will be either partially or fully repressurized. On power recovery the sequence:
   a. Resumes at the DEPRESSURIZATION step to let down the pressure in the off-line tower then,
   b. Advances directly to the beginning of whichever stage of HEAT or COOL it had been at when power was interrupted.
2. If the off-line tower was at any other step (SWITCHOVER, DEPRESSURIZATION, REPRESSURIZATION or HOLD) when power was lost, then the sequence simply resumes at that step.

6.10 Operating Parameters

Control valves are designed so that upon loss of power the air dryer is capable of drying air until the desiccant exposed to the airflow is saturated.

6.11 Using the RS-232 Port

The RS-232 port is used to monitor dryer operation from a host computer.

RS-232 connections are made at the 3-pin connector labeled J3 and located at the upper left-hand corner of the control board.

Interface to a PC requires a (1 to 1) DB-9 cable.

Cable Pin Out:

- Data transmitted on pin 2
- Data received on pin 3
- Ground is pin 5
- Pins 7 and 8 are jumpered at the dryer

Operation:

1. Fixed baud rate of 9600
2. Asynchronous format is 8 bit, no parity, 1 stop bit ("8,N,1")
3. No check sum or error correction values are provided. If required, request status string two (or more) times and compare for agreement.
4. Request data by sending ASCII ? character (3FH). Response may take up to two seconds as certain processing functions may require completion before the serial port is acknowledged.
5. The dryer responds with line feed (0AH), carriage return (0DH), and a character string as follows:

STX	Start of text character 0x02
109	Three character ASCII device identifier
,	comma character
x	ASCII representation of the cycle type
,	
xx	ASCII representation of the cycle step
,	
xxxxx	ASCII representation of the current cycle time in seconds
,	
xxx	ASCII representation of the inlet temperature (°F)
,	
xxx	ASCII representation of the heater temperature (°F)
,	
xxx	ASCII representation of the left bed temperature (°F)
,	
xxx	ASCII representation of the right bed temperature (°F)
,	
xxx	ASCII representation of the humidity sensor temperature (°F)

,
xxx ASCII representation of the humidity sensor relative humidity (%)

,
xxxx ASCII representation of the dew point reading (°F)

,
xxxx ASCII representation of the filter time to service (hours)

,
xxxx ASCII representation of the desiccant time to service (hours)

,
xxxx ASCII representation of the valve time to service (hours)

,
x ASCII representation of programming jumpers

,
1 or 0 Is the unit alarmed? 1 = alarm

,
1 or 0 Is service required? 1 = service

,
xx ASCII representation of the energy savings (%)

,
x Reserved for future use, always 1 for now

,
ETX end of text character OxO3
CR carriage return
LF line feed

JUMPERS:

The programming jumpers are as follows (0=off, 1=on):

JP	Bit	
1	0	off = externally heated on = blower dryer
2	1	on = energy management sensor installed
3	2	on = dew point sensor installed
4	3	on = no cooling (blower purge only)
5	4	on = tower pressure switches installed
6	5	on = not used (fast cycle for development, V3.5 and prior)
7	6	on = to download language text (factory use)
8	7	on = to enable factory set-up screens

Determining jumper positions:

Each jumper 8 bits weighted by position

JP	Value
8	**128**
7	64
6	32
5	16
4	8
3	4
2	2
1	1

Example:

If jumper 8, 5, and 1 are installed, a value of 128+16+1 = 145 is returned

To decode, the algorithm:

- If (number >= 128) ➔ jumper 8 = on
- number = number - 128
- If (number >= 64) ➔ jumper 7 = on
- number = number - 64;
- etc.....

7.0 Maintenance

WARNING - This equipment is a pressure-containing device. Depressurize before servicing.

NOTE: The Dryer Controller is equipped with Service Reminder functions for filters, desiccant and valves.

7.1 Desiccant Replacement

NOTE: The use of the correct replacement desiccant is necessary for proper dryer operation. Never use hygroscopic salts of the type commonly used in "deliquescent " type dryers.

1. **Frequency Of Desiccant Replacement**
   Desiccant should be replaced whenever the required dew point cannot be maintained while the dryer is being operated within its design conditions and there are no mechanical malfunctions.

   NOTE: Desiccant life is determined by the quality of the inlet air. Proper filtering of the inlet air will extend the life of the desiccant. Typically desiccant life is 2 years.

2. **Procedure for Desiccant Charge Replacement**
   a. Depressurize and de-energize the dryer.

   b. Remove the fill and drain plugs or flanges (where applicable) from the desiccant tower and drain the spent desiccant. Place a container at the base of the vessel to collect the desiccant. If necessary tap the sides of the vessels with a rubber mallet to loosen desiccant.

   NOTE: Use extreme care when inserting rods or other tools through the desiccant fill or drain ports to loosen packed desiccant. Internal flow diffusers at the ends of the desiccant beds can be damaged or punctured by sharp instruments. These diffusers are necessary to distribute the airflow and keep the desiccant beads within the tower. Desiccant beads in exhaust mufflers, afterfilters, or the piping connected to the desiccant towers may indicate a perforation of a diffuser.

   c. Replace the drain plug using Teflon tape or another pipe thread sealant suitable for compressed air service. Reinstall drain port flange cover (where applicable) in each desiccant tower.

   d. Refer to Table 1 (on page 5) for desiccant **quantity per tower.**

      When using Table 1 you will find the desiccant quantities listed in layers. Each layer will vary in depth due to the type, quantity and purpose of the desiccant. Layer 1 must be installed first at the bottom of the vessel followed by layer number 2 etc., until the complete charge of desiccant has been installed.

   e. Utilizing an appropriate sized funnel, fill each desiccant tower as follows:

      1) Install the required quantity of tabular support (model 4300 only) or activated alumina in layer 1 of each tower.

      2) Level layer 1 and each subsequent layer of desiccant as added to each tower.

      3) Finish filling each tower with desiccant until all desiccant has been installed. LIGHT tapping on the tower sides with a soft-face mallet should yield additional free space to allow installation of all desiccant required. **DO NOT TAMP OR RAM DESICCANT**.

   f. Clean the fill port closure. Replace the fill plug using Teflon tape or another pipe thread sealant suitable for compressed air service. Reinstall fill port flange cover (where applicable) in desiccant tower.

3. **Insuring Desiccant Dryness**
   Replacement desiccant is shipped in airtight containers. Keep the covers on these containers tightly closed until use to avoid moisture contamination. If desiccant is exposed to air it can be heated in an oven at 400°F (204°C) for four hours before use. Alternatively, if the dryer is not refilled with dry desiccant, it may be necessary to operate the unit with an inlet flow rate of less than 50% of maximum rated inlet capacity until the desiccant has regenerated fully.

7.2 Purge Mufflers

Purge mufflers should be checked regularly, changed annually. Muffler disseminator elements become clogged with desiccant dust over time, creating back pressure and restricted purge flow.

7.3 Valves

1. Process and pilot valves should be checked frequently for leaks and proper operation.
2. Purge pressure adjustment valve should be checked frequently for proper adjustment.

7.4 Pilot Air Filter Element Replacement

1. **Frequency of replacement**
   The pilot air filter contains a filter element that should be changed yearly. Replacement may be required sooner if pressure drop across cartridge prevents valves from actuating properly.

WARNING – The pilot air filter housing is a pressure-containing device, depressurize before servicing. Slowly open manual drain valve on bottom of filter bowl by turning clockwise to verify that the housing is depressurized before removing bowl.

2. **Procedure for element replacement**
   a. Isolate dryer from air supply
   b. Depressurize dryer by running dryer and allowing system pressure to purge to atmosphere. Loss of pilot pressure will eventually prevent purge/ repressurization valves from opening. Remaining pressure can be vented to atmosphere through the manual drain on the pilot air filter. The system must be fully depressurized before removing the bowl.
   c. Remove the filter bowl by pushing up, turning counterclockwise and then pulling straight down.
   d. Clean the filter bowl.
   e. Replace the element.
   f. Clean and lubricate o-ring at top of bowl and reassemble in reverse order.

7.5 Dew Point Analyzer Filter (optional) Element Replacement

1. **Frequency of replacement**
   The Dew Point Analyzer filter contains a filter element that should be changed yearly. Replacement may be required sooner if pressure drop across cartridge prevents the Dew Point Analyzer from operating properly.

WARNING – The Dew Point Analyzer filter housing is a pressure-containing device, depressurize before servicing. Slowly open manual drain valve on bottom of filter bowl by turning clockwise to verify that the housing is depressurized before removing bowl.

2. **Procedure for element replacement**
   a. Isolate dryer from air supply
   b. Depressurize dryer by running dryer and allowing system pressure to purge to atmosphere. Loss of pilot pressure will eventually prevent purge/ repressurization valves from opening. Remaining pressure can be vented to atmosphere through the manual drain on the pilot air filter. The system must be fully depressurized before removing the bowl.
   c. Remove the filter bowl by pushing up, turning counterclockwise and then pulling straight down.
   d. Clean the filter bowl.
   e. Replace the element.
   f. Clean and lubricate o-ring at top of bowl and reassemble in reverse order.

8.0 Troubleshooting

WARNING - A POTENTIAL ELECTRICAL SHOCK HAZARD EXISTS. Some of the troubleshooting checks may require gaining access to the dryer's electrical enclosure(s) while the power supply is energized and should be performed by a qualified electrical technician.

WARNING - Before performing any electrical or mechanical repairs or maintenance, or removing or disassembling any component, be sure to de-energize and depressurize the dryer.

SYMPTOM	POSSIBLE CAUSE(S)	CORRECTIVE ACTION
Indicator lights not illuminated	1. No power to unit. 2. Loss of power supply to (or at) dryer's electrical disconnect switch or breaker. (customer supplied) 3. Blown fuse. 4. Board malfunction.	1. Check voltage at terminal board. 2. Check disconnect switch or breaker closed. If tripped breaker or blown fuse is noted, investigate and Remedy cause. 3. Replace fuse. 4. Replace board.
Excessive pressure drop in dryer	1. Inlet/Outlet screens on desiccant towers are dirty 2. Excessive flow rate	1. Clean screens; follow desiccant removal instructions in the Maintenance section. 2. Check flow rate of inlet air. Reduce to design flow rate.
Low Pressure Alarm Left Tower or Right Tower Drying	1. Loss of dryer air supply. 2. Excessive air demand. 3. Faulty drying tower pressure switch 4. Drying tower Inlet Valve failed to open 5. Drying tower Purge Exhaust Valve failed to close. 6. Drying tower Depressurization Valve failed to close 7. Regenerating tower Outlet Check Valve failed to close 8. Drying tower Purge Check Valve leaking	1. Check compressor supplying dryer. 2. Check equipment downstream of dryer. 3. Check pressure switch operation using tower pressure gauge for comparison. Replace switch if defective. 4a. Check for loss of pilot air - ensure manual drain valve on bottom of pilot air filter is fully closed, ensure pilot air filter cartridge is not clogged, ensure pilot air shut-off valve is open 4b. Check for inlet pilot air solenoid valve failure. Check valve operation. Repair or replace as necessary. 4c. Check for drying tower Inlet Valve failure - examine valve and actuator for damage. Repair or replace as necessary. 5a. Check for air flow out of drying tower Purge Valve or exhaust piping indicating valve is not completely closed. 5b. Check for loss of pilot air - ensure manual drain valve on bottom of pilot air filter is fully closed, ensure pilot air filter cartridge is not clogged, ensure pilot air shut-off valve is open 5c. Check for purge pilot air solenoid valve failure. Check valve operation. Repair or replace as necessary. 5d. Check for drying tower Purge Exhaust Valve failure - examine valve and actuator for damage. Repair or replace as necessary. 6. Check for air flow out of drying tower Depressurization Muffler indicating valve is not completely closed. Repair or replace as necessary. 7. Indicated by excessive flow out of regenerating tower Purge Valve. Examine valve internals. Repair or replace as necessary. 8. Indicated by excessive flow out of regenerating tower Purge Valve or reverse air flow through heater and blower, i.e., out of the blower intake filter, examine valve internals. Repair or replace as necessary. **CAUTION**: Air flowing backwards through heater and blower may be very hot.

SYMPTOM	POSSIBLE CAUSE(S)	CORRECTIVE ACTION
High Pressure Alarm Left Tower or Right Tower Regenerating	1. Faulty regenerating tower pressure switch 2. Regenerating tower Depressurization Muffler clogged. 3. Regenerating tower Depressurization Valve failed to open. 4. Regenerating tower purge exhaust piping obstructed. 5. Regenerating tower Purge Exhaust Valve failed to open. 6. Repressurization valve (V11) failed to close.	1. Check pressure switch operation using tower pressure gauge for comparison. Replace switch if defective. 2. Examine inner core and clean or replace as necessary. 3. Check valve operation. Repair or replace as possible. 4. Ensure piping is free of obstructions. 5a. Check for loss of pilot air - ensure manual drain valve on bottom of pilot air filter is fully closed, ensure pilot air filter cartridge is not clogged, ensure pilot air shut-off valve is open. 5b. Check for purge pilot air solenoid valve failure. Check valve operation. Repair or replace as necessary. 5c. Check for regenerating tower Purge Exhaust Valve failure - examine valve and actuator for damage. Repair or replace as necessary. 6a. Check for loss of pilot air - ensure manual drain valve on bottom of pilot air filter is fully closed, ensure pilot air filter cartridge is not clogged, ensure pilot air shut-off valve is open. 6b. Check for Repressurization Valve (V11) failure. Check valve operation. Repair or replace as necessary.
Low Pressure Alarm Left Tower or Right Tower Regenerating	1. Faulty left tower pressure switch. 2. Regenerating tower Purge Exhaust Valve failed to close. 3. Regenerating tower Depressurization Valve failed to close. 4. Repressurization valve (V11) failed to open. 5. Repressurization orifices are blocked.	1. Check pressure switch operation using tower pressure gauge for comparison. Replace switch if defective. 2a. Check for air flow out of regenerating tower Purge Valve or exhaust piping indicating valve is not completely closed. 2b. Check for loss of pilot air - ensure manual drain valve on bottom of pilot air filter is fully closed, ensure pilot air filter cartridge is not clogged, ensure pilot air shut-off valve is open 2c. Check for purge pilot air solenoid valve failure. Check valve operation. Repair or replace as necessary. 2d. Check for regenerating tower Purge Exhaust Valve failure - examine valve and actuator for damage. Repair or replace as necessary. 3. Check for air flow out of regenerating tower Depressurization Muffler indicating valve is not completely closed. Repair or replace as necessary. 4a. Check for loss of pilot air - ensure manual drain valve on bottom of pilot air filter is fully closed, ensure pilot air filter cartridge is not clogged, ensure pilot air shut-off valve is open. 4b. Examine repressurization valve (V11) for damage. Repair or replace as necessary. 5. Check orifices for obstruction and clean as necessary.
Temperature Under-Range **or** **Temperature Over-Range Alarm** Left Tower or Right Tower	1. Tower temperature sensor failure. Under-Range ➔ Short circuit on sensor Over-Range ➔ Open circuit on sensor	1. Check temperature circuit for continuity. Repair or replace as necessary.
Dew Point Under-Range **or** **Dew Point Over-Range Alarm** Left Tower or Right Tower Regenerating	1. Energy Management temperature sensor (RTD4) failure.	1. Check temperature circuit for continuity. Repair or replace as necessary.

SYMPTOM	POSSIBLE CAUSE(S)	CORRECTIVE ACTION
Outlet Dew Point Alarm Left Tower or Right Tower	1. Inlet air flow higher than the sizing condition. 2. Liquids entering the dryer inlet. 3. Inlet air temperature higher than the sizing condition. 4. Desiccant dusting. 5. Contaminated desiccant (e.g. with oil). 6. Heater temperature set too low. 7. Heating malfunction due to heater failure or heater contactor failure.	1. Reduce inlet flow to sizing condition. 2. Check the inlet air line for liquids. Inspect prefilter and drain valve. Clean, repair or replace automatic drain valve. 3. Check the compressor aftercooler and cooling system. Reduce inlet air temperature to sizing condition. 4. Check air pressure, airflow and airflow surges and correct as necessary. Replace desiccant. 5. Check prefilter and automatic drain valve. Replace prefilter element. Clean, repair or replace drain valve as necessary. Consult factory concerning need for desiccant replacement. 6. Adjust controller set point. 7. Replace heater or heater contactor.
High Humidity Alarm Left Tower or Right Tower	1. Desiccant bed overloaded. 2. Dew point sensor or monitor damaged or defective. 3. Loss of desiccant drying capacity	1. Check inlet air flow rate, temperature and pressure. Higher than design flow, and temperature, and lower than design pressure will result in overloading of the dryer. 2. Examine sensor for physical damage and check monitor/ sensor operation. Replace sensor or monitor as necessary. 3. Inlet air improperly filtered causing desiccant contamination - examine filter elements and drains. Repair or replace as necessary. Useful life of desiccant has been exceeded.
Heater Over-Temperature Alarm	1. Insufficient purge gas flow. 2. Temperature sensor failure.	1. Check for purge blockage, temperature sensor failure, etc. 2. Repair and replace as required.
Heater Low-Temperature Alarm	1. Heating malfunction due to heater failure or heater contactor failure. 2. Temperature sensor failure.	1. Replace heater or heater contactor. 2. Repair and replace as required.
Energy Management Under-Range Alarm **or** **Energy Management Over-Range Alarm**	1. Energy Management sensor failure.	1. Check circuit for continuity. Repair or replace as necessary.
Blower Motor Overload Alarm	1. Restricted or blocked purge air flow. 2. Line failure	1a. Dirty intake filter on blower - examine filter element and clean or replace. 1b. Regenerating tower purge exhaust valve failed to open - 1) Check for loss of pilot air - ensure manual drain valve on bottom of pilot air filter is fully closed, ensure pilot air filter cartridge is not clogged, ensure pilot air shut-off valve is open. 2) Check for purge pilot air solenoid valve failure. Check valve operation. Repair or replace as necessary. 3) Check for regenerating tower Purge Exhaust Valve failure - examine valve and actuator for damage. Repair or replace as necessary. 1c. Purge exhaust piping obstructed - ensure piping is free of obstructions. 1d. Regenerating tower purge check valve failed to open - examine valve internals. Repair or replace as necessary. 2. Check voltages and currents in the motor circuit.
Heater High Inlet Temperature (models 3200, 3600, & 4300 only)	1. On-line tower purge check valve is leaking. 2. Temperature sensor failure.	1. Examine valve internals. Repair or replace as required. 2. Repair and replace as required.

Electrical Schematic – 460VAC, 3 phase

(Contact factory to request certified drawings)

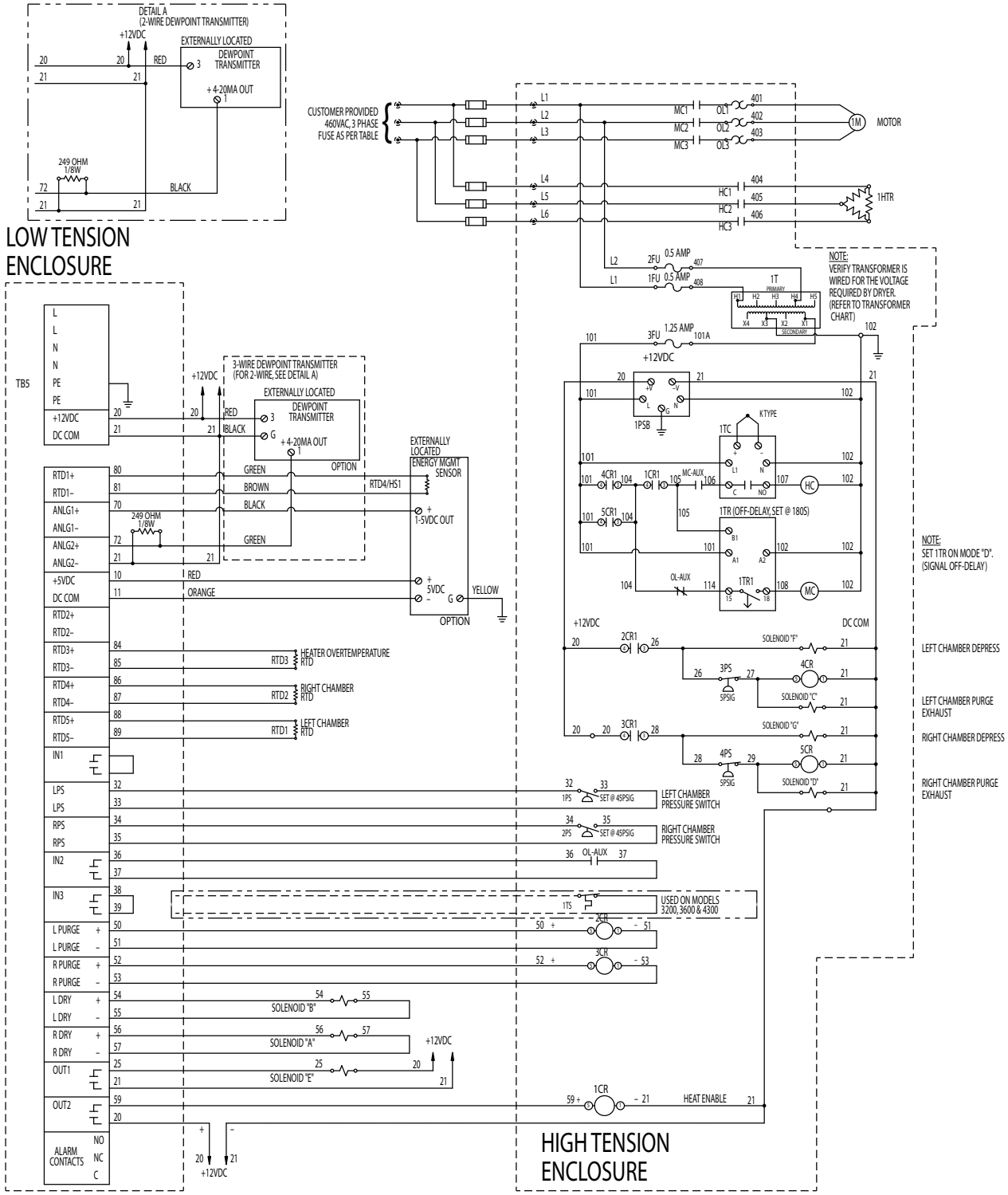

TRANSFORMER VOLTAGES						
CONNECT TO LINE FOR RESPECTIVE VOLTAGE				OUTPUT VOLTS		
H1 - H2	H1 - H3	H1 - H4	H1 - H5	X1 - X2	X1 - X3	X1 - X4
208	–	–	500	85	100	110
220	380	440	550	91	110	120
230	400	460	575	95	115	125
240	416	480	600	99	120	130

Electrical Schematic – 575VAC, 3 phase

(Contact factory to request certified drawings)

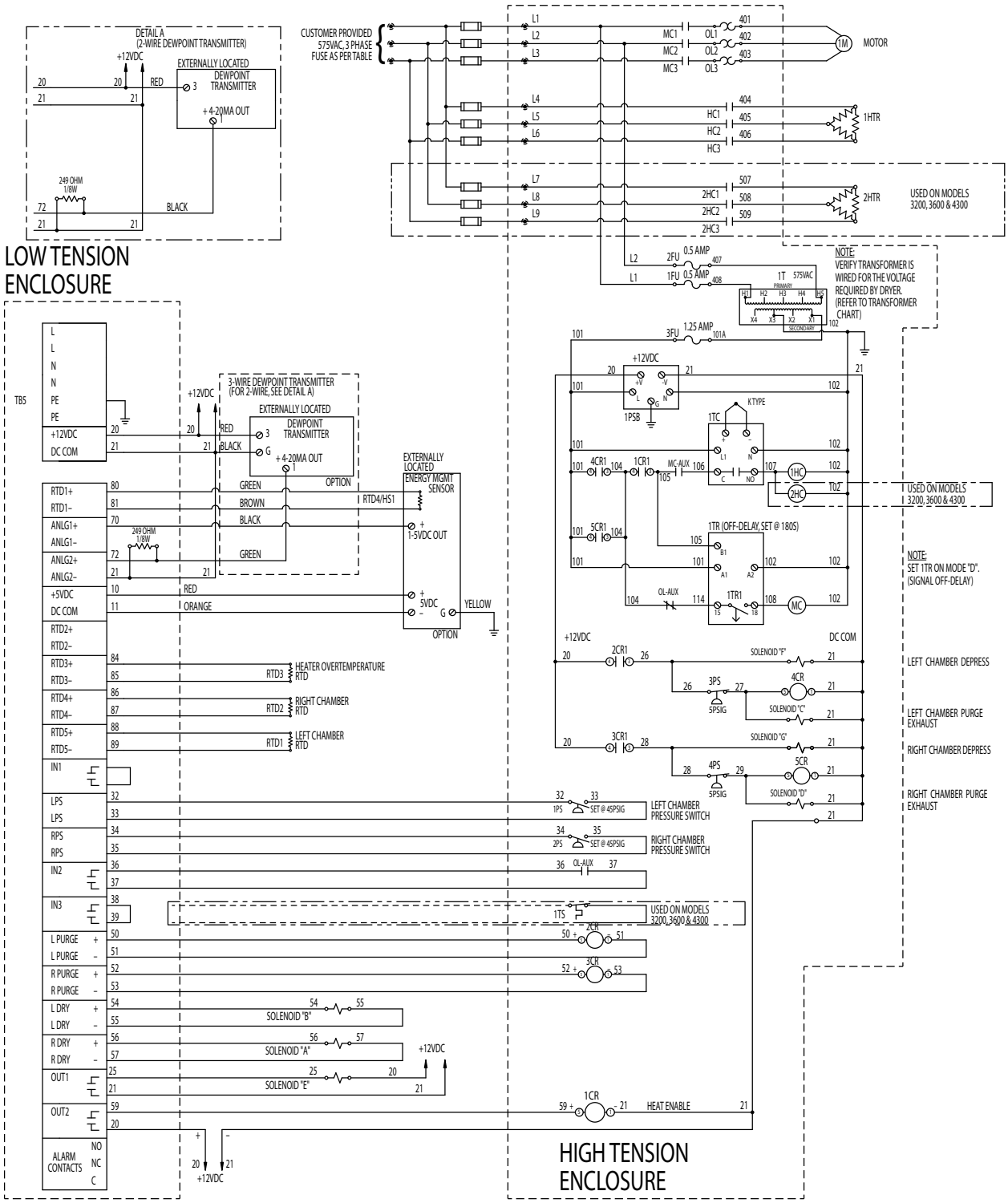

TRANSFORMER VOLTAGES						
CONNECT TO LINE FOR RESPECTIVE VOLTAGE				OUTPUT VOLTS		
H1 - H2	H1 - H3	H1 - H4	H1 - H5	X1 - X2	X1 - X3	X1 - X4
208	–	–	500	85	100	110
220	380	440	550	91	110	120
230	400	460	575	95	115	125
240	416	480	600	99	120	130

Electrical Data – Fusing & Wire Sizing

Electrical Service: 460VAC, 3 phase

MODEL	COMPONENT	RATING	F.L.A. @460VAC	SUGGESTED FUSING
500	HEATER	10 KW	12.6	20 AMPS
	MOTOR	2.5 HP	4.1	7.5 AMPS
600	HEATER	12 KW	15.1	20 AMPS
	MOTOR	4 HP	6.2	10 AMPS
750	HEATER	14 KW	17.6	25 AMPS
	MOTOR	4 HP	6.2	10 AMPS
900	HEATER	17 KW	21.3	30 AMPS
	MOTOR	4 HP	6.2	10 AMPS
1050	HEATER	19 KW	23.8	30 AMPS
	MOTOR	5 HP	7.6	12 AMPS
1300	HEATER	23 KW	28.9	40 AMPS
	MOTOR	7.5 HP	11	17.5 AMPS
1500	HEATER	28 KW	35.1	45 AMPS
	MOTOR	10 HP	14	20 AMPS
1800	HEATER	33 KW	41.4	60 AMPS
	MOTOR	10 HP	14	20 AMPS
2200	HEATER	40 KW	50.2	70 AMPS
	MOTOR	10 HP	14	20 AMPS
2600	HEATER	45 KW	56.5	80 AMPS
	MOTOR	15 HP	21	30 AMPS
3200	HEATER	54 KW	67.8	90 AMPS
	MOTOR	5 HP	7.6	12 AMPS
3600	HEATER	60 KW	75.3	100 AMPS
	MOTOR	7.5 HP	9	12.0 AMPS
4300	HEATER	70 KW	87.9	110 AMPS
	MOTOR	7.5 HP	11	17.5 AMPS

Electrical Service: 575VAC, 3 phase

MODEL	COMPONENT	RATING	F.L.A. @575VAC	SUGGESTED FUSING
500	HEATER	10 KW	10.0	15 AMPS
	MOTOR	2.5 HP	3.3	6 AMPS
600	HEATER	12 KW	12.0	20 AMPS
	MOTOR	4 HP	5.0	9 AMPS
750	HEATER	14 KW	14.1	20 AMPS
	MOTOR	4 HP	5.0	9 AMPS
900	HEATER	17 KW	17.1	25 AMPS
	MOTOR	4 HP	5.0	9 AMPS
1050	HEATER	19 KW	19.1	25 AMPS
	MOTOR	5 HP	6.1	9 AMPS
1300	HEATER	23 KW	23.1	30 AMPS
	MOTOR	7.5 HP	9.0	15 AMPS
1500	HEATER	28 KW	28.1	40 AMPS
	MOTOR	10 HP	11.0	17.5 AMPS
1800	HEATER	33 KW	33.1	50 AMPS
	MOTOR	10 HP	11.0	17.5 AMPS
2200	HEATER	40 KW	40.2	60 AMPS
	MOTOR	10 HP	11.0	17.5 AMPS
2600	HEATER	45 KW	45.2	60 AMPS
	MOTOR	15 HP	17.0	25 AMPS
3200*	HEATER	2 - 27 KW	2 - 27.1	2 - 40 AMPS
	MOTOR	5 HP	6.1	9 AMPS
3600*	HEATER	2 - 30 KW	2 - 31.1	2 - 40 AMPS
	MOTOR	5 HP	6.1	9 AMPS
4300*	HEATER	2 - 35 KW	2 - 35.1	2 - 50 AMPS
	MOTOR	7.5 HP	9.0	15 AMPS

* Models 3200, 3600 and 4300 use a two-stage heater circuit with two contactors, six fuses, and six wires.

P&ID Schematic - Models 500 through 600

(Contact factory to request certified drawings)

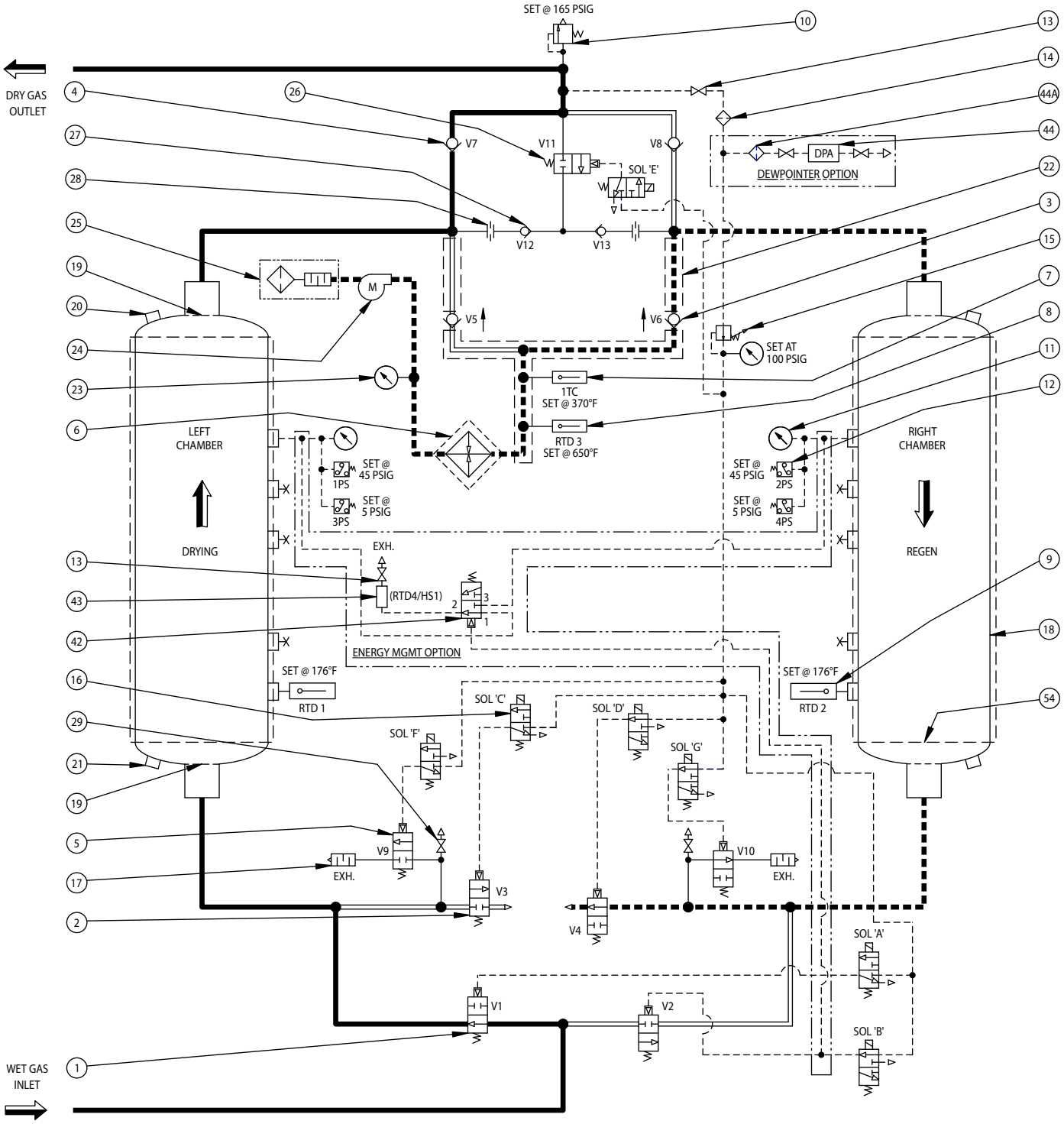

NOTES

1. SYMBOLS ARE PER ANSI Y32.10 "GRAPHIC SYMBOLS FOR FLUID POWER DIAGRAMS."
2. AS SHOWN FLOW DIRECTION IS:
   - LEFT CHAMBER DRYING
   - RIGHT CHAMBER REGEN
   - PILOT GAS LINE
3. SOLENOID VALVES 'B', 'D', & 'G' ARE SHOWN ENERGIZED, SOLENOID VALVES 'A', 'C', 'E', & 'F' ARE SHOWN DE-ENERGIZED.
4. INDICATES OPTION

LEGEND

1. INLET VALVE (V1 LEFT, V2 RIGHT)
2. PURGE EXHAUST VALVE (V3 LEFT, V4 RIGHT)
3. PURGE CHECK VALVE (V5 LEFT, V6 RIGHT)
4. OUTLET CHECK VALVE (V7 LEFT, V8 RIGHT)
5. DEPRESS VALVE (V9 LEFT, V10 RIGHT)
6. PURGE HEATER WITH INSULATION
7. HEATER TEMPERATURE THERMOCOUPLE
8. HEATER OVERTEMPERATURE RTD
9. CHAMBER RTD (LEFT & RIGHT)
10. RELIEF VALVE
11. CHAMBER PRESSURE GAUGES (LEFT & RIGHT)
12. CHAMBER PRESSURE SWITCH (LEFT & RIGHT)
13. SERVICE VALVE
14. PILOT AIR FILTER
15. PRESSURE REGULATOR & GAUGE
16. SOLENOID VALVE
17. MUFFLER
18. DESICCANT CHAMBER
19. DESICCANT RETAINING SCREEN (TOP & BOTTOM)
20. DESICCANT FILL PORT
21. DESICCANT DRAIN PORT
22. HOT PIPE INSULATION
23. PURGE PRESSURE GAUGE
24. PURGE BLOWER AND MOTOR
25. PURGE SUCTION FILTER SILENCER
26. REPRESS/SWEEP VALVE (V11)
27. REPRESS/SWEEP CHECK VALVE (V12 LEFT, V13 RIGHT)
28. REPRESS/SWEEP ORIFICE
29. CHAMBER BLOW-DOWN VALVE

ENERGY MANAGEMENT OPTION

42. ENERGY MANAGEMENT PILOT OPERATED VALVE
43. ENERGY MANAGEMENT SENSOR (RTD4/HS1)

DEWPOINTER OPTION

44. DEWPOINT ANALYZER
44A. DEWPOINT ANALYZER FILTER

INSULATION OPTION

54. CHAMBER INSULATION

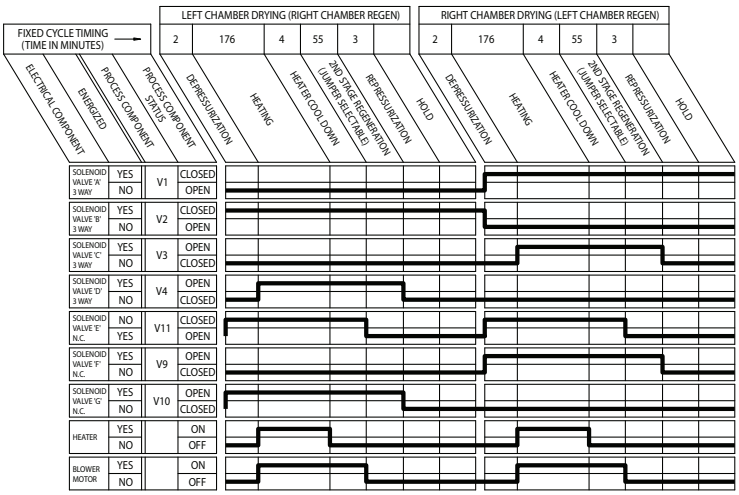

Sequence of Operation
(Models 500 through 600)

P&ID Schematic - Models 750 through 4300

(Contact factory to request certified drawings)

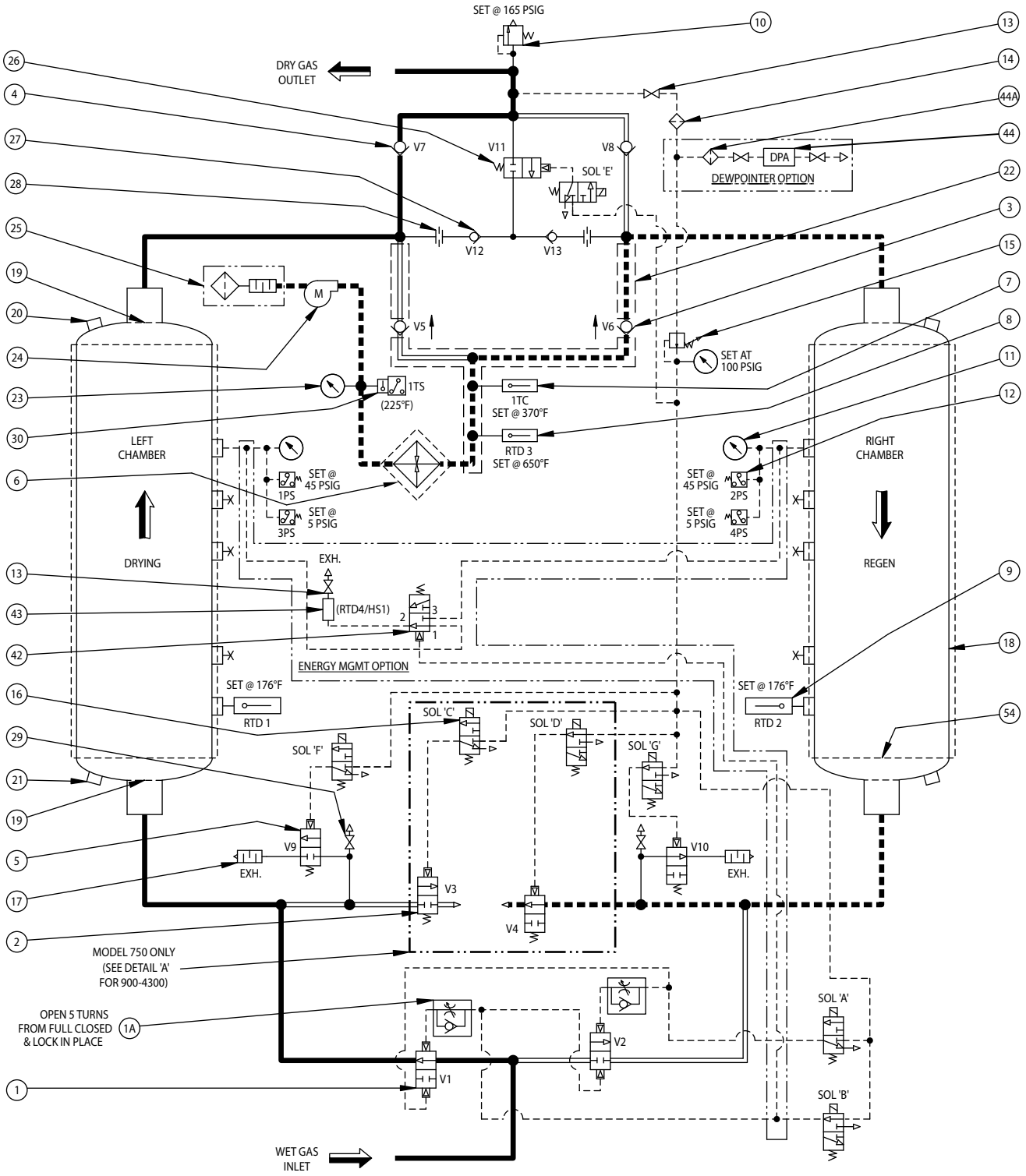

NOTES

1. SYMBOLS ARE PER ANSI Y32.10 "GRAPHIC SYMBOLS FOR FLUID POWER DIAGRAMS."
2. AS SHOWN FLOW DIRECTION IS:
   - LEFT CHAMBER DRYING
   - RIGHT CHAMBER REGEN
   - PILOT GAS LINE
3. SOLENOID VALVES 'B', 'D', & 'G' ARE SHOWN ENERGIZED,
   SOLENOID VALVES 'A', 'C', 'E', & 'F' ARE SHOWN DE-ENERGIZED.
4. INDICATES OPTION

LEGEND

1. INLET VALVE (V1 LEFT, V2 RIGHT)
1A. FLOW CONTROL VALVE
2. PURGE EXHAUST VALVE (V3 LEFT, V4 RIGHT)
3. PURGE CHECK VALVE (V5 LEFT, V6 RIGHT) (NO SPRING)
4. OUTLET CHECK VALVE (V7 LEFT, V8 RIGHT)
5. DEPRESS VALVE (V9 LEFT, V10 RIGHT)
6. PURGE HEATER WITH INSULATION
7. HEATER TEMPERATURE THERMOCOUPLE
8. HEATER OVERTEMPERATURE RTD
9. CHAMBER RTD (LEFT & RIGHT)
10. RELIEF VALVE
11. CHAMBER PRESSURE GAUGES (LEFT & RIGHT)
12. CHAMBER PRESSURE SWITCH (LEFT & RIGHT)
13. SERVICE VALVE
14. PILOT AIR FILTER
15. PRESSURE REGULATOR & GAUGE
16. SOLENOID VALVE
17. MUFFLER
18. DESICCANT CHAMBER
19. DESICCANT RETAINING SCREEN (TOP & BOTTOM)
20. DESICCANT FILL PORT
21. DESICCANT DRAIN PORT
22. HOT PIPE INSULATION
23. PURGE PRESSURE GAUGE
24. PURGE BLOWER AND MOTOR
25. PURGE SUCTION FILTER SILENCER
26. REPRESS/SWEEP VALVE (V11)
27. REPRESS/SWEEP CHECK VALVE (V12 LEFT, V13 RIGHT)
28. REPRESS/SWEEP ORIFICE
29. CHAMBER BLOW-DOWN VALVE
30. TEMPERATURE SWITCH (MODELS 3200 - 4300 ONLY)

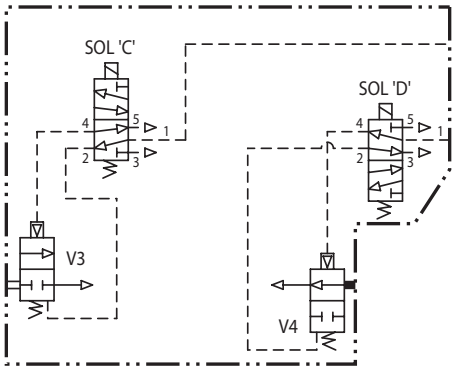

DETAIL 'A' (MODELS 900-4300)

ENERGY MANAGEMENT OPTION

42. ENERGY MANAGEMENT PILOT OPERATED VALVE
43. ENERGY MANAGEMENT SENSOR (RTD4/HS1)

DEWPOINTER OPTION

44. DEWPOINT ANALYZER
44A. DEWPOINT ANALYZER FILTER

INSULATION OPTION

54. CHAMBER INSULATION

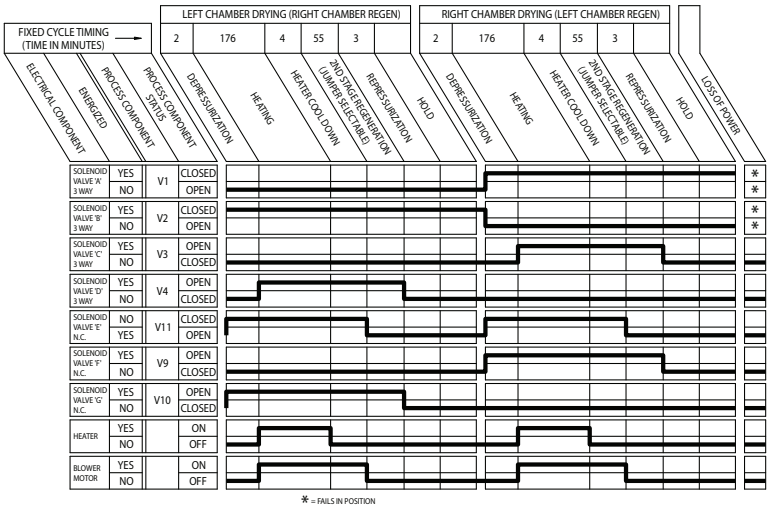

Sequence of Operation
(Model 750 through 4300)

Replacement Parts – Models 500 through 600

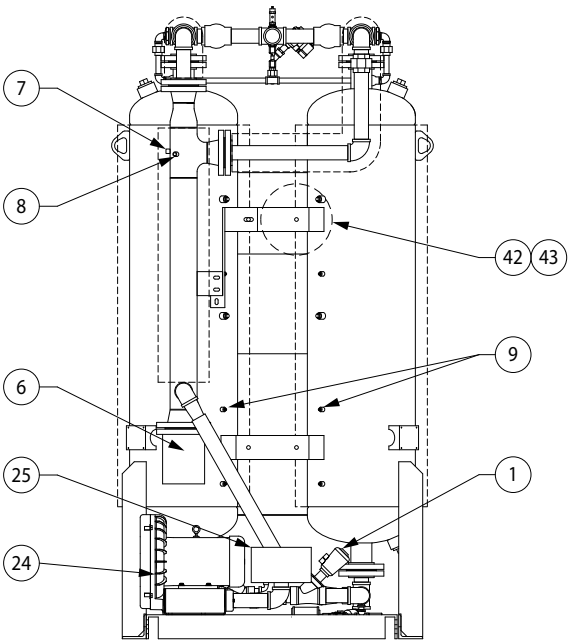

REAR VIEW

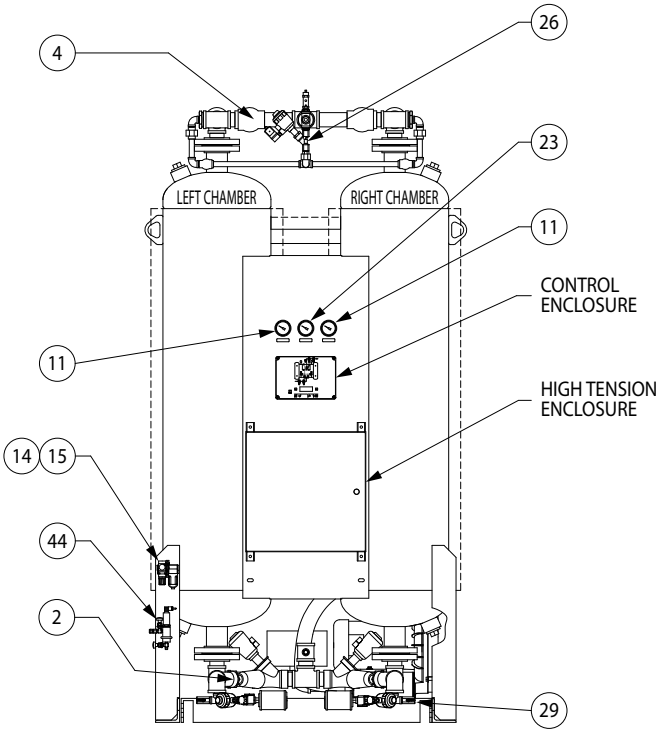

FRONT VIEW

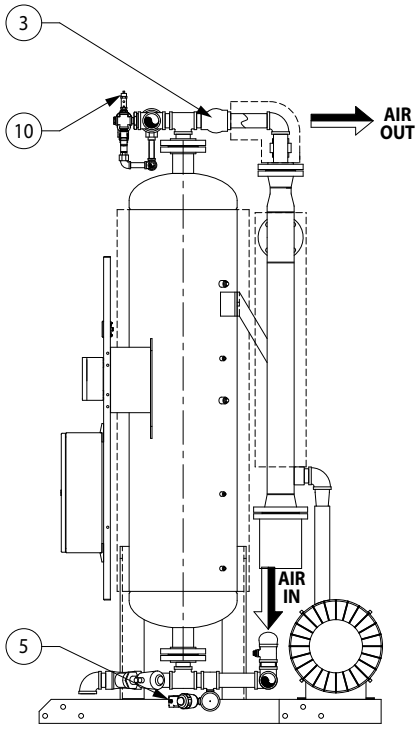

SIDE VIEW
(RIGHT CHAMBER REMOVED FOR CLARITY)

Phone: +1 724 745 1555
Email: ft.dehydration.order.entry@spxflow.com
Web: www.spxflow.com/hankison

MAINTENANCE KITS

		MODEL 500	MODEL 600
Year 2 Maintenance Kit	Elements*, Muffler, Drain, Desiccant Evaluation Kit	HBPMK2-04	HBPMK2-06
Year 3 Maintenance Kit	All the contents of the 2 Year Kit, Pressure Switches, Valve Repair Kits, Blower Hose	HBPMK3-04	HBPMK3-06
Year 4 Maintenance Kit	Elements*, Muffler, Drain, Desiccant Evaluation Kit	HBPMK4-04	HBPMK4-06
Year 5 Maintenance Kit	All the contents of the 4 Year Kit, Pressure Switches, Valve Repair Kits, Blower Hose	HBPMK5-04	HBPMK5-06
Desiccant Kit		HBPDES-04	HBPDES-06

*NOTE: For dryer's shipped with optional pre-piped F0 or F3 Filter packages, add "-A" for year 2 - 5 kits. (Replacement Prefilter and Afterfilter elements are not included in Standard Kits.)

REPLACEMENT PARTS

ID#	DESCRIPTION			SAFETY STOCK	DRYER QTY.
1	Inlet Valve Assembly (V1 & V2)	3151877	3151877	1	2
*	Solenoid Valve (Sol "A", "B")	3203652	3203652	1	2
2	Purge Exhaust Valve Assembly (V3 & V4)	3152701	3152701	1	2
*	Solenoid Valve (Sol "C", "D")	3203652	3203652	1	2
3	Purge Check Valve (V5 & V6)	3160401	3160401	1	2
4	Outlet Check Valve (V7 & V8)	3160401	3160401	1	2
5	Depress Valve (V9, V10)	7438612	7438612	1	2
*	Depress Solenoid Valve (Sol "F", "G")	3203652	3203652	1	2
6	Purge Heater	3152742	3152741		1
7	Heater Temperature Thermocouple (1TC)	3153971	3153971		1
8	Heater Overtemperature RTD (RTD3)	3153224	3153224		1
9	Chamber RTD (RTD1, RTD2)	3153224	3153224	1	2
10	Pressure Relief Valve	7400684	7400684		1
11	Chamber Pressure Gauge	7450553	7450553	1	2
12	Chamber Pressure Switch (1PS, 2PS)	3149016	3149016	1	2
*	Chamber Depressurization Pressure Switch (3PS, 4PS)	3152525	3152525	1	2
14	Pilot Air Filter Element	3158592	3158592	1	1
15	Pilot Air Pressure Regulator	3154237	3154237		1
17	Depress Muffler	3133635	3133635		2
*	Depress Muffler Replacement Core	3075949	3075949	2	2
23	Purge Pressure Gauge	7450569	7450569		1
24	Blower (460V)	3157984	3158197		1
*	Blower Hose	3251999	3242540		1
25	Silencer Assembly	3152461	3152461		1
*	Blower Inlet Silencer Element	1270769	1270769		1
26	Repress/Sweep Valve (V11)	7438612	7438612	1	1
*	Repress/Sweep Solenoid Valve (Sol "E")	3203652	3203652	1	1
27	Repress/Sweep Check Valve (V12 & V13)	3151005	3151005	1	2
29	Chamber Blowdown Valve	4009894	4009894		2
42	Energy Management Pilot Operated Valve	1274209	1274209		1
43	Energy Management Sensor (RTD4/HS1)	3144864	3144864		1
*	Energy Management Vent Needle Valve	3158747	3158747		1
44	Dew-point Sensor - Ceramic	3154859	3154859		1
*	Dryer Controller	7417845	7417845		1
*	Heater Contactor	3157896	3157896		1
*	Blower Motor Contactor	3147640	3147640		1
*	Relay, Overload, 3Pole, 600V Max, 3.2-16Amp	3158551	3158551		1
*	Relay, SPDT 12VDC Coil, 120VAC, 10A (1CR, 2CR, 3CR, 4CR, 5CR)	3154359	3154359	1	5
*	Fuse 1.25A 600V (3FU)	1240671	1240671	1	1
*	Fuse .5A 600V (1FU, 2FU)	1241118	1241118	1	2
*	Temperature Controller	7416897	7416897		1
*	Timer, SPDT, 0.1S-120HR	3203083	3203083		1
Desiccant Evaluation Kit		3150628	3150628		
Pre-Filter Assembly		HF5-44-20-DG	HF5-44-20-DG		
Auto-Drain		3152270	3152270		
Afterfilter Assembly		HTA600	HTA600		

NOTES:
1. Parts and Maintenance Kits are for standard builds only. Please contact the factory with your dryer serial number for assistance on identifying spare parts and maintenance kits for your specific unit.
2. All quantities for one dryer.
3. ID# correspond to P&ID legend (* Not pictured in diagrams.)

Phone: +1 724 745 1555
Email: ft.dehydration.order.entry@spxflow.com
Web: www.spxflow.com/hankison

Replacement Parts – Models 750 through 1800

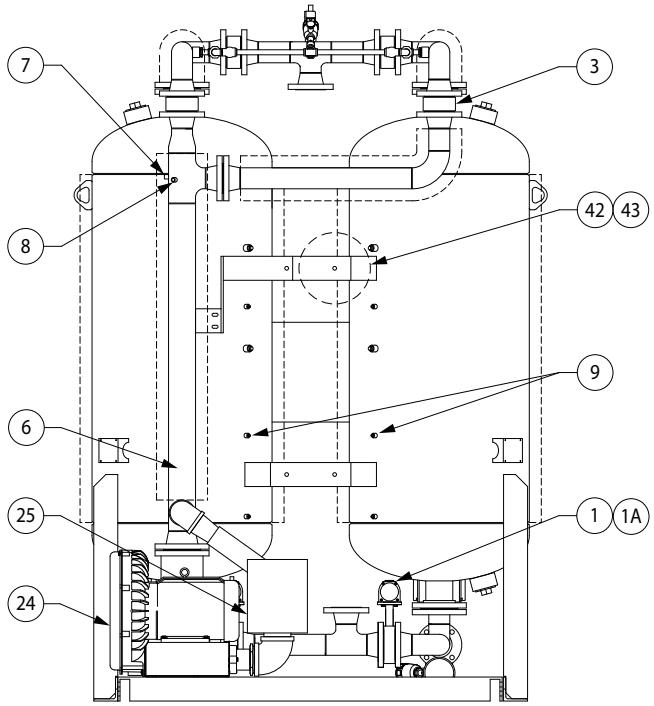

REAR VIEW

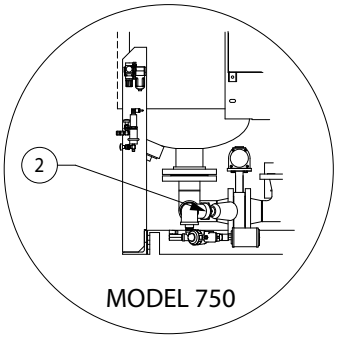

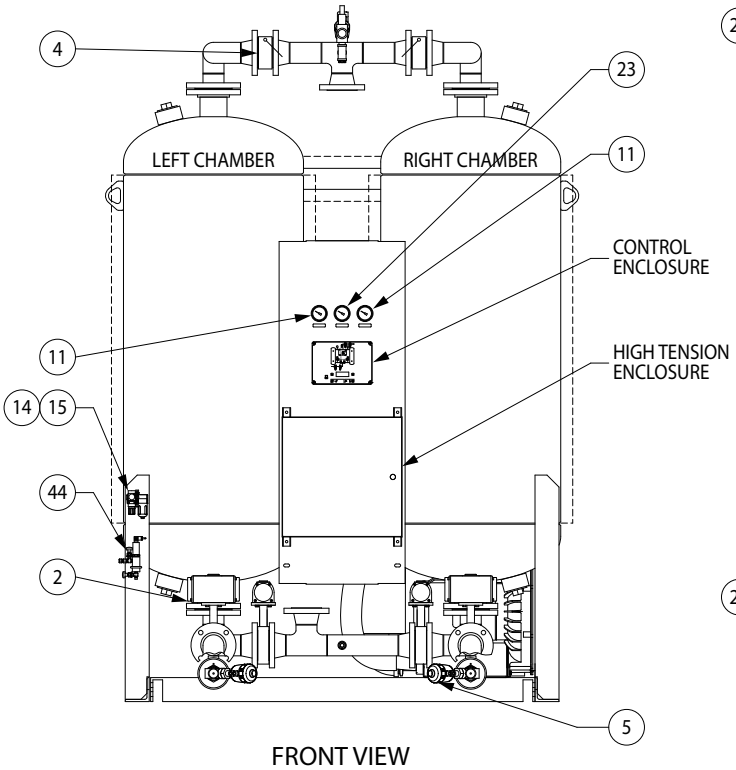

FRONT VIEW

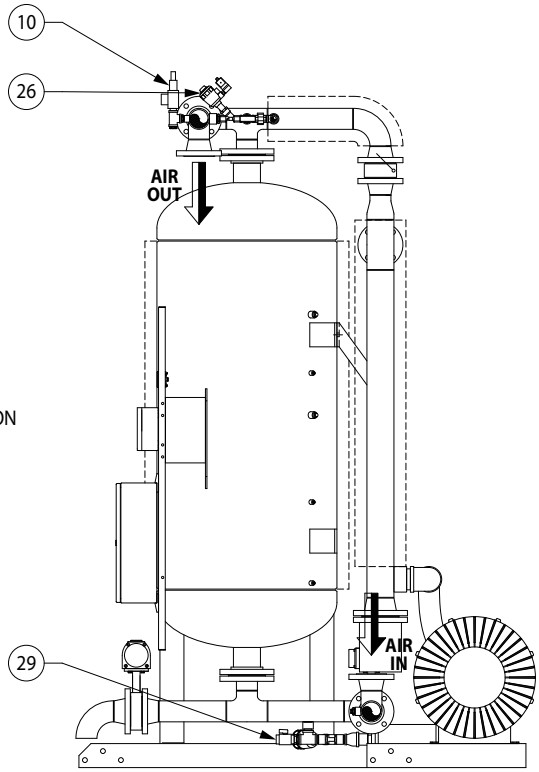

SIDE VIEW
(RIGHT CHAMBER REMOVED FOR CLARITY)

Phone: +1 724 745 1555
Email: ft.dehydration.order.entry@spxflow.com
Web: www.spxflow.com/hankison

MAINTENANCE KITS

		MODEL					
		750	900	1050	1300	1500	1800
Year 2 Maintenance Kit	Elements*, Muffler, Drain, Desiccant Evaluation Kit	HBPMK2-08	HBPMK2-10	HBPMK2-12	HBPMK2-14	HBPMK2-16	HBPMK2-18
Year 3 Maintenance Kit	All the contents of the 2 Year Kit, Pressure Switches, Valve Repair Kits, Blower Hose	HBPMK3-08	HBPMK3-10	HBPMK3-12	HBPMK3-14	HBPMK3-16	HBPMK3-18
Year 4 Maintenance Kit	Elements*, Muffler, Drain, Desiccant Evaluation Kit	HBPMK4-08	HBPMK4-10	HBPMK4-12	HBPMK4-14	HBPMK4-16	HBPMK4-18
Year 5 Maintenance Kit	All the contents of the 4 Year Kit, Pressure Switches, Valve Repair Kits, Blower Hose	HBPMK5-08	HBPMK5-10	HBPMK5-12	HBPMK5-14	HBPMK5-16	HBPMK5-18
Desiccant Kit		HBPDES-08	HBPDES-10	HBPDES-12	HBPDES-14	HBPDES-16	HBPDES-18

*NOTE: For dryer's shipped with optional pre-piped F0 or F3 Filter packages, add "-A" for year 2 - 5 kits. (Replacement Prefilter and Afterfilter elements are not included in Standard Kits.)

REPLACEMENT PARTS

ID#	DESCRIPTION	750	900	1050	1300	1500	1800	SAFETY STOCK	DRYER QTY.
1	Inlet Valve Assembly (V1 & V2)	7448898	7448898	7448898	7448898	7448898	7448898	1	2
*	Solenoid Valve (Sol "A", "B")	3203652	3203652	3203652	3203652	3203652	3203652	1	2
1A	Inlet Pilot Operated Valve	3155189	3155189	3155189	3155189	3155189	3155189	1	2
2	Purge Exhaust Valve Assembly (V3 & V4)	3152701	7448894	7448894	7448894	7448894	7448894	1	2
*	Solenoid Valve (Sol "C", "D")	3203652	4009880	4009880	4009880	4009880	4009880	1	2
*	Solenoid Valve Coil (Sol "C", "D")	N/A	4009810	4009810	4009810	4009810	4009810	1	2
3	Purge Check Valve (V5 & V6)	7405310	7405310	7405310	7405310	7405310	7405310	1	2
4	Outlet Check Valve (V7 & V8)	3160059	3160059	3160059	3160059	3160059	3160059	1	2
5	Depress Valve (V9, V10)	7438612	7438612	7438612	7438612	7438613	7438613	1	2
*	Depress Solenoid Valve (Sol "F", "G")	3203652	3203652	3203652	3203652	3203652	3203652	1	2
6	Purge Heater	1200773	3152734	3152735	1171782	3152736	3152738		1
7	Heater Temperature Thermocouple (1TC)	3153971	3153971	3153971	3153971	3153971	3153971		1
8	Heater Overtemperature RTD (RTD3)	3153224	3153224	3153224	3153224	3153224	3153224		1
9	Chamber RTD (RTD1, RTD2)	3153224	3153224	3153224	3153224	3153224	3153224	1	2
10	Pressure Relief Valve	7400684	7400684	7400684	7400684	3100938	3100938		1
11	Chamber Pressure Gauge	7450553	7450553	7450553	7450553	7450553	7450553	1	2
12	Chamber Pressure Switch (1PS, 2PS)	3149016	3149016	3149016	3149016	3149016	3149016	1	2
*	Chamber Depressurization Pressure Switch (3PS, 4PS)	3152525	3152525	3152525	3152525	3152525	3152525	1	2
14	Pilot Air Filter Element	3158592	3158592	3158592	3158592	3158592	3158592		1
15	Pilot Air Pressure Regulator	3154237	3154237	3154237	3154237	3154237	3154237		1
17	Depress Muffler	3133635	3133635	3071392	3071392	3071392	3071392		2
*	Depress Muffler Replacement Core	3075949	3075949	3107791	3107791	3107791	3107791	2	2
23	Purge Pressure Gauge	7450569	7450569	7450569	7450569	7450569	7450569		1
24	Blower (460V)	3158197	3158197	3158198	3158199	3158200	3158200		1
*	Blower Hose	3242540	3242540	3242540	3251998	3242539	3242539		1
25	Purge Suction Filter Silencer Assembly	3152728	3152728	3152728	3152729	3152729	3158021		1
*	Blower Inlet Silencer Element	1270769	1270769	1270769	3153683	3153683	3159138	1	1
26	Repress/Sweep Valve (V11)	7438612	7438612	7438612	7438612	7438612	7438612	1	1
*	Repress/Sweep Solenoid Valve (Sol 'E')	3203652	3203652	3203652	3203652	3203652	3203652	1	1
27	Repress/Sweep Check Valve (V12 & V13)	3151005	3151005	3151005	3151005	3151005	3151005	1	2
29	Chamber Blowdown Valve	4009894	4009894	4009894	4009894	4009900	4009900		2
42	Energy Management Pilot Operated Valve	1274209	1274209	1274209	1274209	1274209	1274209		1
43	Energy Management Sensor (RTD4/HS1)	3144864	3144864	3144864	3144864	3144864	3144864		1
*	Energy Management Vent Needle Valve	3158747	3158747	3158747	3158747	3158747	3158747		1
44	Dew-point Sensor - Ceramic	3154859	3154859	3154859	3154859	3154859	3154859		1
*	Dryer Controller	7417845	7417845	7417845	7417845	7417845	7417845		1
*	Heater Contactor	3157896	3157896	3157896	3157896	3158650	3158650	1	1
*	Blower Motor Contactor	3147640	3147640	3147640	3147640	3149521	3149521		1
*	Relay, Overload, 3Pole, 600V Max, 3.2-16Amp	3158551	3158551	3158551	3158551	N/A	N/A		1
*	Relay, Overload, 3Pole, 600V Max, 5.4-27Amp	N/A	N/A	N/A	N/A	3158481	3158481		1
*	Relay, SPDT 12VDC Coil, 120VAC, 10A (1CR, 2CR, 3CR, 4CR, 5CR)	3154359	3154359	3154359	3154359	3154359	3154359	1	5
*	Fuse 1.25A 600V (3FU)	1240671	1240671	1240671	1240671	1240671	1240671	1	1
*	Fuse .5A 600V (1FU, 2FU)	1241118	1241118	1241118	1241118	1241118	1241118	1	2
*	Temperature Controller	7416897	7416897	7416897	7416897	7416897	7416897		2
*	Timer, SPDT, 0.1S-120HR	3203083	3203083	3203083	3203083	3203083	3203083		1
Desiccant Evaluation Kit		3150628	3150628	3150628	3150628	3150628	3150628		
Pre-Filter Assembly		HF5-48-20-DG	HF5-54-24-G	HF5-56-24-G	HF5-60-24-G	HF5-60-24-G	HF5-60-24-G		
Auto-Drain		3152270	6000003	6000003	6000003	6000003	6000003		
Afterfilter Assembly		HTA1200	HTA1200	HTA1200	HTA1800	HTA1800	HTA1800		

NOTES:
1. Parts and Maintenance Kits are for standard builds only. Please contact the factory with your dryer serial number for assistance on identifying spare parts and maintenance kits for your specific unit.
2. All quantities for one dryer.
3. ID# correspond to P&ID legend (* Not pictured in diagrams.)
4. N/A - Not Applicable to this Model Size

Phone: +1 724 745 1555
Email: ft.dehydration.order.entry@spxflow.com
Web: www.spxflow.com/hankison

Replacement Parts – Models 2200 through 2600

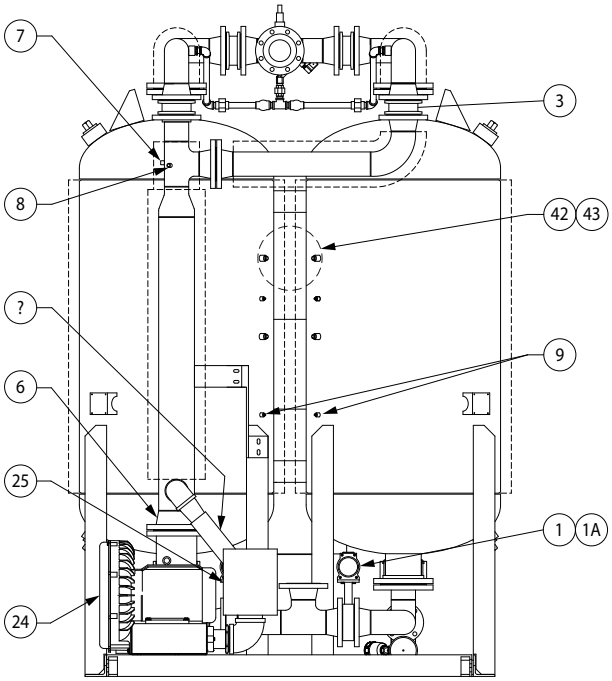

REAR VIEW

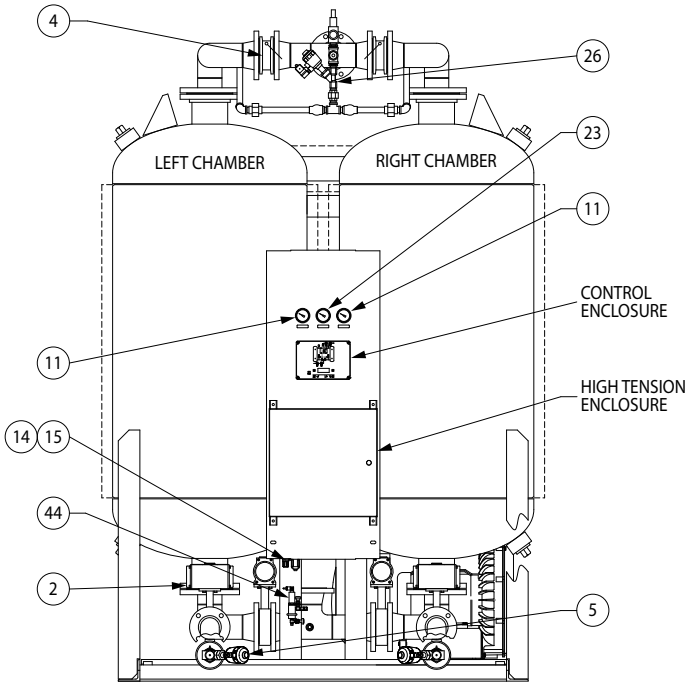

FRONT VIEW

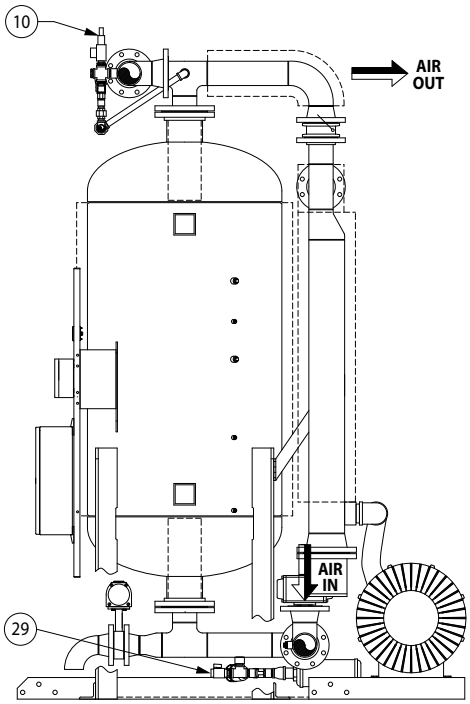

SIDE VIEW
(RIGHT CHAMBER REMOVED FOR CLARITY)

Phone: +1 724 745 1555
Email: ft.dehydration.order.entry@spxflow.com
Web: www.spxflow.com/hankison

MAINTENANCE KITS

		MODEL 2200	MODEL 2600
Year 2 Maintenance Kit	Elements*, Muffler, Drain, Desiccant Evaluation Kit	HBPMK2-20	HBPMK2-22
Year 3 Maintenance Kit	All the contents of the 2 Year Kit, Pressure Switches, Valve Repair Kits, Blower Hose	HBPMK3-20	HBPMK3-22
Year 4 Maintenance Kit	Elements*, Muffler, Drain, Desiccant Evaluation Kit	HBPMK4-20	HBPMK4-22
Year 5 Maintenance Kit	All the contents of the 4 Year Kit, Pressure Switches, Valve Repair Kits, Blower Hose	HBPMK5-20	HBPMK5-22
Desiccant Kit		HBPDES-20	HBPDES-22

*NOTE: For dryer's shipped with optional pre-piped F0 or F3 Filter packages, add "-A" for year 2 - 5 kits. (Replacement Prefilter and Afterfilter elements are not included in Standard Kits.)

REPLACEMENT PARTS

ID#	DESCRIPTION			SAFETY STOCK	DRYER QTY.
1	Inlet Valve Assembly (V1 & V2)	7448896	7448896	1	2
*	Solenoid Valve (Sol "A", "B")	3203652	3203652	1	2
1A	Inlet Pilot Operated Valve	3155189	3155189	1	2
2	Purge Exhaust Valve Assembly (V3 & V4)	7448894	7448894	1	2
*	Solenoid Valve (Sol "C", "D")	4009880	4009880	1	2
*	Solenoid Valve Coil (Sol "C", "D")	4009810	4009810	1	2
3	Purge Check Valve (V5 & V6)	3160063	3160063	1	2
4	Outlet Check Valve (V7 & V8)	3160060	3160060	1	2
5	Depress Valve (V9, V10)	7438613	7438613	1	2
*	Depress Solenoid Valve (Sol "F", "G")	3203652	3203652	1	2
6	Purge Heater	1217919	1205010		1
7	Heater Temperature Thermocouple (1TC)	3153971	3153971		1
8	Heater Overtemperature RTD (RTD3)	3153224	3153224		1
9	Chamber RTD (RTD1, RTD2)	3153224	3153224	1	2
10	Pressure Relief Valve	3100938	3100938		1
11	Chamber Pressure Gauge	7450553	7450553	1	2
12	Chamber Pressure Switch (1PS, 2PS)	3149016	3149016		2
*	Chamber Depressurization Pressure Switch (3PS, 4PS)	3152525	3152525		2
14	Pilot Air Filter Element	3158592	3158592		1
15	Pilot Air Pressure Regulator	3154237	3154237		1
17	Depress Muffler	3204478	3204478		2
*	Depress Muffler Replacement Core	3126761	3126761	1	2
23	Purge Pressure Gauge	7450569	7450569		1
24	Blower (460V)	3158200	3158201		1
*	Blower Hose	3242539	3242539		1
25	Purge Suction Filter Silencer Assembly	3158021	3158021		1
*	Blower Inlet Silencer Element	3159138	3159138	1	1
26	Repress/Sweep Valve (V11)	7438613	7438613	1	1
*	Repress/Sweep Solenoid Valve (Sol 'E')	3203652	3203652	1	1
27	Repress/Sweep Check Valve (V12 & V13)	3152094	3152094	1	2
29	Chamber Blowdown Valve	4009900	4009900		2
42	Energy Management Pilot Operated Valve	1274209	1274209		1
43	Energy Management Sensor (RTD4/HS1)	3144864	3144864		1
*	Energy Management Vent Needle Valve	3158747	3158747		1
44	Dew-point Sensor - Ceramic	3154859	3154859		1
*	Dryer Controller	7417845	7417845		1
*	Heater Contactor	3158650	3158650		1
*	Blower Motor Contactor	3149521	3149521		1
*	Relay, Overload, 3Pole, 600V Max, 5.4-27Amp	3158481	3158481		1
*	Relay, SPDT 12VDC Coil, 120VAC, 10A (1CR, 2CR, 3CR, 4CR, 5CR)	3154359	3154359	1	5
*	Fuse 1.25A 600V (3FU)	1240671	1240671	1	1
*	Fuse .5A 600V (1FU, 2FU)	1241118	1241118	1	2
*	Temperature Controller	7416897	7416897		1
*	Timer, SPDT, 0.1S-120HR	3203083	3203083		1
Desiccant Evaluation Kit		3150628	3150628		
Pre-Filter Assembly		HF5-64-4F-G	HF5-68-4F-G		
Auto-Drain		6000003	6000003		
Afterfilter Assembly		HTA2400	HTA3000		

NOTES:
1. Parts and Maintenance Kits are for standard builds only. Please contact the factory with your dryer serial number for assistance on identifying spare parts and maintenance kits for your specific unit.
2. All quantities for one dryer.
3. ID# correspond to P&ID legend (* Not pictured in diagrams.)

Phone: +1 724 745 1555
Email: ft.dehydration.order.entry@spxflow.com
Web: www.spxflow.com/hankison

Replacement Parts – Models 3200 through 4300

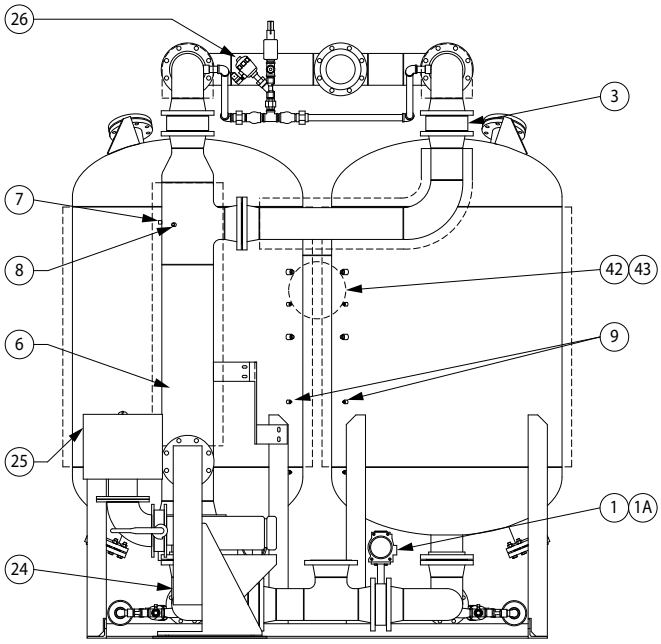

REAR VIEW

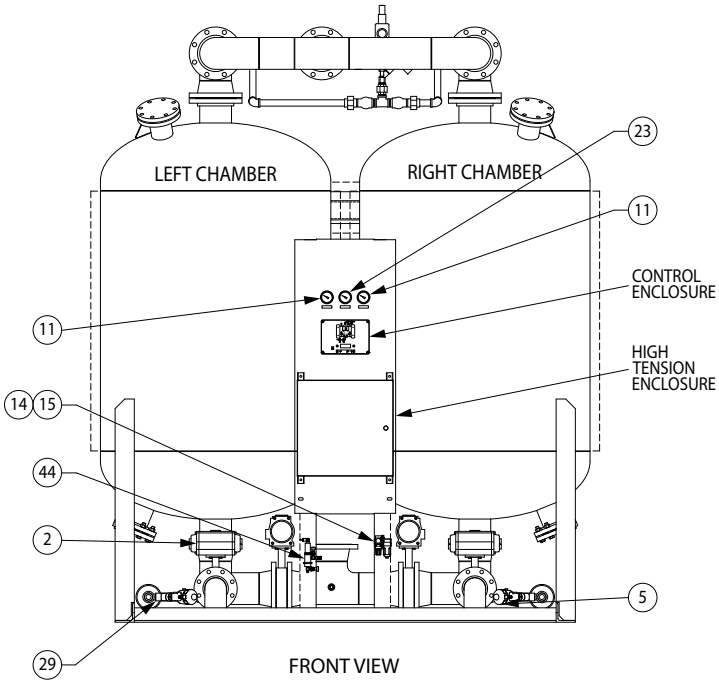

FRONT VIEW

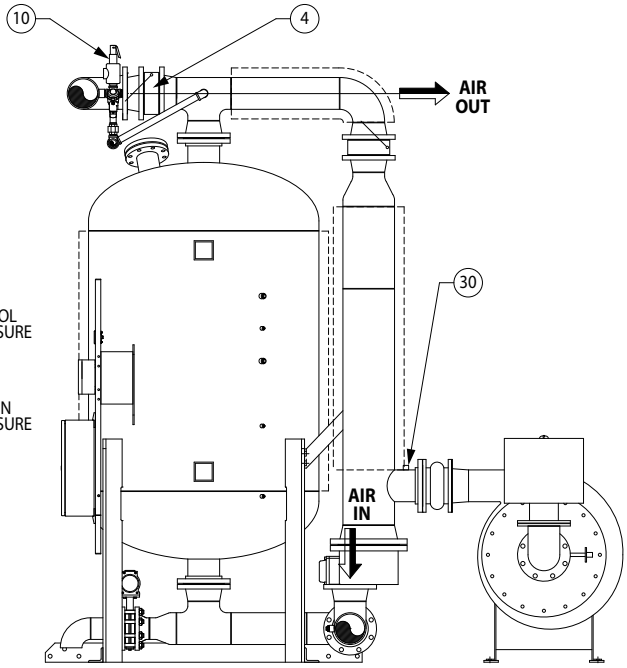

SIDE VIEW
(RIGHT CHAMBER REMOVED FOR CLARITY)

Phone: +1 724 745 1555
Email: ft.dehydration.order.entry@spxflow.com
Web: www.spxflow.com/hankison

MAINTENANCE KITS

		MODEL		
		3200	3600	4300
Year 2 Maintenance Kit	Elements*, Muffler, Drain, Desiccant Evaluation Kit	HBPMK2-24	HBPMK2-26	HBPMK2-28
Year 3 Maintenance Kit	All the contents of the 2 Year Kit, Pressure Switches, Valve Repair Kits, Blower Hose	HBPMK3-24	HBPMK3-26	HBPMK3-28
Year 4 Maintenance Kit	Elements*, Muffler, Drain, Desiccant Evaluation Kit	HBPMK4-24	HBPMK4-26	HBPMK4-28
Year 5 Maintenance Kit	All the contents of the 4 Year Kit, Pressure Switches, Valve Repair Kits, Blower Hose	HBPMK5-24	HBPMK5-26	HBPMK5-28
Desiccant Kit		HBPDES-24	HBPDES-26	HBPDES-28

*NOTE: For dryer's shipped with optional pre-piped F0 or F3 Filter packages, add "-A" for year 2 - 5 kits. (Replacement Prefilter and Afterfilter elements are not included in Standard Kits.)

REPLACEMENT PARTS

ID#	DESCRIPTION				SAFETY STOCK	DRYER QTY.
1	Inlet Valve Assembly (V1 & V2)	7448896	7448901	7448901	1	2
*	Solenoid Valve (Sol "A", "B")	3203652	3203652	3203652	1	2
1A	Inlet Pilot Operated Valve	3155189	3155189	3155189	1	2
2	Purge Exhaust Valve Assembly (V3 & V4)	7448895	7448895	748895	1	2
*	Solenoid Valve (Sol "C", "D")	4009880	4009880	4009880	1	2
*	Solenoid Valve Coil (Sol "C", "D")	4009810	4009810	4009810	1	2
3	Purge Check Valve (V5 & V6)	3160064	3160064	3160064	1	2
4	Outlet Check Valve (V7 & V8)	3160061	3160061	3160061	1	2
5	Depress Valve (V9, V10)	7438613	7438613	7438614	1	2
*	Depress Solenoid Valve (Sol "F", "G")	3203652	3203652	3203652	1	2
6	Purge Heater	1181451	1185499	1276268		1
7	Heater Temperature Thermocouple (1TC)	3153971	3153971	3153971		1
8	Heater Overtemperature RTD (RTD3)	3153224	3153224	3153224		1
9	Chamber RTD (RTD1, RTD2)	3153224	3153224	3153224	1	2
10	Pressure Relief Valve	3100938	3100938	3119442		1
11	Chamber Pressure Gauge	7450553	7450553	7450553		2
12	Chamber Pressure Switch (1PS, 2PS)	3149016	3149016	3149016	1	2
*	Chamber Depressurization Pressure Switch (3PS, 4PS)	3152525	3152525	3152525	1	2
14	Pilot Air Filter Element	3158592	3158592	3158592	1	1
15	Pilot Air Pressure Regulator	3154237	3154237	3154237		1
17	Depress Muffler	3130773	3130773	3130773		2
*	Depress Muffler Replacement Core	3121200	3121200	3121200	1	2
23	Purge Pressure Gauge	7450569	7450569	7450569		1
24	Blower (460V)	3158474	3158475	3158475		1
*	Purge Blower Throttling Valve	1170918	1170918	1170918		1
*	Expansion Joint	1206327	1206327	1206327		1
25	Purge Suction Filter Silencer Assembly	3032795	3032795	3032795		1
*	Blower Inlet Silencer Element	3504482	3504482	3504482	1	1
26	Repress/Sweep Valve (V11)	7438613	7438614	7438614	1	1
*	Repress/Sweep Solenoid Valve (Sol 'E')	3203652	3203652	3203652	1	1
27	Repress/Sweep Check Valve (V12 & V13)	3152094	3152095	3152095	1	2
29	Chamber Blowdown Valve	4009900	4009900	4009900		2
30	Heater High Inlet Temperature Switch (1TS)	3159879	3159879	3159879		1
42	Energy Management Pilot Operated Valve	1274209	1274209	1274209		1
43	Energy Management Sensor (RTD4/HS1)	3144864	3144864	3144864		1
*	Energy Management Vent Needle Valve	3158747	3158747	3158747		1
44	Dew-point Sensor - Ceramic	3154859	3154859	3154859		1
*	Dryer Controller	7417845	7417845	7417845		1
*	Heater Contactor	3158326	3158326	3158326		1
*	Blower Motor Contactor	3149521	3149521	3149521		1
*	Relay, Overload, 3Pole, 600V Max, 3.2-16Amp	3158481	3158481	3158481		1
*	Relay, SPDT 12VDC Coil, 120VAC, 10A (1CR, 2CR, 3CR, 4CR, 5CR)	3154359	3154359	3154359	1	5
*	Fuse 1.25A 600V (3FU)	1240671	1240671	1240671	1	1
*	Fuse .5A 600V (1FU, 2FU)	1241118	1241118	1241118	1	2
*	Timer, SPDT, 0.1S-120HR	3203083	3203083	3203083		1
*	Temperature Controller	7416897	7416897	7416897		1
Desiccant Evaluation Kit		3150628	3150628	3150628		
Pre-Filter Assembly		HF5-72-6F-G	HF5-72-6F-G	HF5-72-6F-G		
Auto-Drain		6000003	6000003	6000003		
Afterfilter Assembly		HTA4800	HTA4800	HTA4800		

NOTES:
1. Parts and Maintenance Kits are for standard builds only. Please contact the factory with your dryer serial number for assistance on identifying spare parts and maintenance kits for your specific unit.
2. All quantities for one dryer.
3. ID# correspond to P&ID legend (* Not pictured in diagrams.)

Phone: +1 724 745 1555
Email: ft.dehydration.order.entry@spxflow.com
Web: www.spxflow.com/hankison

WARRANTY

The manufacturer warrants the product manufactured by it, when properly installed, operated, applied, and maintained in accordance with the procedures and recommendations outlined in the manufacturer's instruction manuals, to be free from defects in material or workmanship for a period of one (1) year from the date of shipment from the manufacturer or the manufacturer's authorized distributor, or eighteen (18) months from the date of shipment from the factory, whichever occurs first, provided such defect is discovered and brought to the manufacturer's attention the aforesaid warranty period. The manufacturer will repair or replace any product or part determined to be defective by the manufacturer within the warranty period, provided such defect occurred in normal service and not as the result of misuse, abuse, neglect, or accident.

The warranty covers parts and labor for the warranty period. Repair or replacement shall be made at the factory or the installation site, at the sole option of the manufacturer. The manufacturer must first authorize any service performed on the product by anyone other than the manufacturer. Normal maintenance items requiring routine replacement are not warranted. Unauthorized service voids the warranty and any resulting charge or subsequent claim will not be paid.

THE FOREGOING WARRANTY IS EXCLUSIVE AND IN LIEU OF ALL OTHER WARRANTIES, WRITTEN, ORAL, OR STATUTORY, AND IS EXPRESSED IN LIEU OF THE IMPLIED WARRANTY OF MERCHANTABILITY AND THE IMPLIED WARRANTY OF FITNESS FOR A PARTICULAR PURPOSE. THE MANUFACTURER SHALL NOT BE LIABLE FOR LOSS OR DAMAGE BY REASON OF STRICT LIABILITY IN TORT OR ITS NEGLIGENCE IN WHATEVER MANNER INCLUDING DESIGN, MANUFACTURE, OR INSPECTION OF THE EQUIPMENT OR ITS FAILURE TO DISCOVER, REPORT, REPAIR, OR MODIFY LATENT DEFECTS INHERENT THEREIN. THE MANUFACTURER, HIS REPRESENTATIVE OR DISTRIBUTOR SHALL NOT BE LIABLE FOR LOSS OF USE OF THE PRODUCT OR OTHER INCIDENTAL OR CONSEQUENTIAL COSTS, EXPENSES, OR DAMAGES INCURRED BY THE BUYER, WHETHER ARISING FROM BREACH OF WARRANTY, NEGLIGENCE OR STRICT LIABILITY IN TORT.

The manufacturer does not warranty any product, part, material, component, or accessory manufactured by others and sold or supplied in connection with the sale of the manufacturer's products.

AUTHORIZATION FROM THE SERVICE DEPARTMENT IS NECESSARY BEFORE MATERIAL IS RETURNED TO THE FACTORY OR IN-WARRANTY REPAIRS ARE MADE.

SERVICE DEPARTMENT: (724) 746-1100

HBP SERIES

Blower Purge Desiccant Compressed Air Dryer

SPXFLOW

SPX FLOW
4647 S.W. 40th Avenue
Ocala, Florida 34474-5788 U.S.A.
P: (724) 745-1555
F: (724) 745-6040
E: hankison.americas@spxflow.com
www.spxflow.com/hankison

Improvements and research are continuous at SPX FLOW, Inc.
Specifications may change without notice.

ISSUED 12/2017 Form No.: 3158050 Revision: L
COPYRIGHT ©2017 SPX FLOW, Inc.