Price $ 5.00

GARDNER-DENVER®

13-9-635
1st Edition

ELECTRA-SAVER II®
STATIONARY
BASE-MOUNTED
COMPRESSOR
SELECTRA CON PC CONTROL

Models

60 HP
ECMQKC ECMSKC

75 HP
ECMQLC ECMSLC

100 HP
ECPQMC ECPSMC

Operating and Service Manual

COOPER INDUSTRIES

INDUSTRIAL MACHINERY

GARDNER-DENVER®

WARRANTY
ROTARY SCREW COMPRESSORS
EC ELECTRA-SAVER II®
EA ELECTRA-SAVER®
EB, ET ELECTRA-SCREW®
SE, ST PACKAGES

A warranty registration card is provided with each machine. The card must be completed by the purchaser and mailed (card is preaddressed and postage paid) within ten days after machine start up in order to validate this warranty.

Gardner-Denver/Industrial Machinery (the "Company") warrants to each original retail purchaser ("Purchaser") of its products from the Company or its authorized distributors that such products will be free from defects in material and workmanship caused by Company and shall be warranted as follows:

BASIC COMPRESSOR AIR ENDS

Basic compressor air ends, consisting of all parts within and including the compressor cylinder and gear housing, are warranted for 24 months from date of initial use or 27 months from date of shipment to the first purchaser, whichever occurs first.

The Company will furnish, at its option, air end repairs, a remanufactured replacement air end, or a new replacement air end, FOB factory for any air end which in its judgment proved not to be as warranted within the applicable period.

Purchaser must return, transportation charges prepaid, any air end claimed to be not as warranted to a Gardner-Denver factory. Any disassembly or partial disassembly of the air end, or failure to return the "unopened" air end per Company instructions, will be cause for denial of warranty.

ELECTRIC MOTORS

Electric motors, when specified and furnished by the Company, are warranted for 12 months from date of initial use or 15 months from date of shipment to the first purchaser, whichever occurs first.

The motor manufacturer or authorized service shop will provide at its option, motor repairs or replacement motor FOB manufacturer's location for any motor which in the manufacturer's judgment proves not to be as warranted within the applicable period.

ENGINES

Engines are warranted to the extent of the original manufacturer's warranty to the Company.

OTHER COMPONENTS

All other components are warranted for 12 months from date of initial use or 15 months from date of shipment to first purchaser, whichever occurs first.

The Company will furnish at its option FOB Company location repairs or replacement parts for any component which in the Company's judgment proved not to be as warranted within the applicable period.

GENERAL PROVISIONS AND LIMITATIONS

No warranty is made with respect to:

1. Any product which has been repaired or altered in such a way, in the Company's judement, as to affect the product adversely.

2. Any product which has, in the Company's judgment been subject to negligence, accident, improper storage, or improper installation or application.

3. Any product which has not been operated or maintained in accordance with normal practice and with the recommendations of the Company.

4. Components or accessories manufactured, warranted and serviced by others, except as separately rated.

5. Any reconditioned or prior owned product.

Claims for items descibed in (4) above should be submitted directly to the manufacturer.

The Company's obligation under this warranty is limited to repair or replacement, at its option during normal business hours at an authorized service facility of the Company, of any part which in its judgment proved not to be as warranted within the applicable Warranty Period. The Company may require the return of any part claimed not to be as warranted to one of its facilities as designated by Company, transportation prepaid by Purchaser, to establish a claim under this warranty.

The Company will provide labor for repair or replacement of any product or part thereof which in the Company's judgment is proved not to be as warranted, by Company representative up to the amount specified in the Company's labor rate schedules, or up to the amount the Company determines is reasonable. Labor costs in excess of the Company rate schedule amounts or labor provided by unauthorized service personnel is not provided for by this warranty.

Replacement parts provided under the terms of the warranty are warranted for the remainder of the Warranty Period of the product upon which installed to the same extent as if such parts were original components thereof.

DISCLAIMER

THE FOREGOING WARRANTY IS EXCLUSIVE AND IT IS EXPRESSLY AGREED THAT, EXCEPT AS TO TITLE, THE COMPANY MAKES NO OTHER WARRANTIES, EXPRESSED, IMPLIED OR STATUTORY, INCLUDING ANY IMPLIED WARRANTY OF MERCHANTABILITY.

THE REMEDY PROVIDED UNDER THIS WARRANTY SHALL BE THE SOLE, EXCLUSIVE AND ONLY REMEDY AVAILABLE TO PURCHASER AND IN NO CASE SHALL THE COMPANY BE SUBJECT TO ANY OTHER OBLIGATIONS OR LIABILITIES. UNDER NO CIRCUMSTANCES SHALL THE COMPANY BE LIABLE FOR SPECIAL, INDIRECT, INCIDENTAL OR CONSEQUENTIAL DAMAGES, EXPENSES, LOSSES OR DELAYS HOWSOEVER CAUSED.

No statement, representation, agreement, or understanding, oral or written, made by any agent, distributor, representative, or employee of the Company which is not contained in this Warranty will be binding upon the Company unless made in writing and executed by an officer of the Company.

This warranty shall not be effective as to any claim which is not presented within 30 days after the date upon which product is claimed not to have been as warranted. Any action for breach of this warranty must be commenced within one year after the date upon which the cause of action occurred.

Any adjustment made pursuant to this warranty shall not be construed as an admission by the Company that any product was not as warranted.

FOREWORD

Gardner-Denver® Electra-Saver II® compressors are the result of advanced engineering and skilled manufacturing. To be assured of receiving maximum service from this machine the owner must exercise care in its operation and maintenance. This book is written to give the operator and maintenance department essential information for day-to-day operation, maintenance and adjustment. Careful adherence to these instructions will result in economical operation and minimum downtime.

DANGER

FAILURE TO OBSERVE A DANGER NOTICE COULD RESULT IN INJURY TO, OR DEATH OF PERSONNEL.

WARNING

FAILURE TO OBSERVE A WARNING NOTICE COULD RESULT IN DAMAGE TO EQUIPMENT.

CAUTION

CAUTION NOTICES SET FORTH GENERAL REMINDERS OF GOOD SAFETY PRACTICE, OR DIRECT ATTENTION TO UNSAFE PRACTICES.

NOTE: INFORMATION FURNISHED IN A NOTE WILL INCLUDE GENERAL INFORMATION OR THE HIGHLIGHTS OF A PROCEDURE.

This book covers the following models with SELECTRA CON control:

HP	PSIG	Air Cooled	Water Cooled
60	100 125	ECMQKC	ECMSKC
75	100 125 150	ECMQLC	ECMSLC
100	100 125 150	ECPQMC	ECPSMC

TABLE OF CONTENTS

GENERAL INFORMATION . . . . . SECTION 1

INSTALLATION . . . . . SECTION 2

STARTING AND OPERATING PROCEDURES . . . . . SECTION 3

CONTROLS AND INSTRUMENTS . . . . . SECTION 4

LUBRICATION, OIL COOLER, OIL FILTER AND SEPARATOR . . . . . SECTION 5

AIR FILTERS . . . . . SECTION 6

COUPLING . . . . . SECTION 7

MAINTENANCE SCHEDULE . . . . . SECTION 8

TROUBLE SHOOTING . . . . . SECTION 9

REBUILDING DATA . . . . . SECTION 10

INDEX

NOTE: Numbers preceeding dash are Section Numbers – Numbers following dash are Page Numbers.

Addition of Oil Between Changes 5-3
Air Control Components 4-2
Air Filter Indicator 4-2
AIR FILTERS (SECTION 6) 6-1
Air Flow in the Compressor System 1-1
Auxiliary Accessories 2-3
Auxiliary Air Receiver 2-4, 4-8

Blowdown Valve 4-2, 4-4
Blowdown Valve Piping 2-5

Check Valve 4-5
Cold Ambient Operation 5-2
Cold Weather Operation, Installation for 2-2
Compression Principle 1-1
Control Air Filter 4-3
Control Piping 2-4
CONTROLS & INSTRUMENTS (SECTION 4) 4-1
Control Schematics . . . . . 4-11 thru 4-13
Control System Operation 4-8
COUPLING (SECTION 7) 7-1

Daily Check 3-1
Dimensions 10-1, 10-2
Discharge Air Pressure Gauge 4-2
Discharge Air Temperature Gauge 4-2
Discharge Temperature, Air and Oil 5-7
Discharge Service Line 2-4
Draining and Cleaning Oil System 5-3

Electrical Wiring 2-5
Enclosure 2-2
Emergency Stop Switch 4-5

Filling Oil Reservoir 5-3
Fits 10-1, 10-2
Flow Diagram – Air-Oil Systems 5-1
Foundation 2-2

GENERAL INFORMATION (SECTION 1) 1-1
Grease Recommendations 2-6
Grounding 2-5

High Discharge Temperature Switch 4-1
High Temperature Operation 5-2
Hourmeter 4-5

Inlet Line 2-4
Inlet Valve 4-3
INSTALLATION (SECTION 2) 2-1
Instrument Panel 4-2

Location 2-1
Low Demand Four-Way Solenoid Valve 4-4
Low Demand Pressure Switch 4-4
Lubricants 5-2
Lubrication, Cooling and Sealing 1-1
LUBRICATION, OIL COOLER, OIL FILTER & SEPARATOR (SECTION 5) 5-1

MAINTENANCE SCHEDULE (SECTION 8) 8-1
Memory Module 4-6
Minimum Discharge Pressure Valve 4-5
Moisture in the Oil System 5-3
Moisture Separator/Trap 2-4
Motor Lubrication 2-5
Motor Protection Devices 4-1

Oil Change Interval 5-3
Oil Cooler, Compressor 5-4
Oil Cooler Oil Pressure Differential 5-7
Oil Cooler Temperature Differential 5-7
Oil Cooler Water Pressure Differential 5-7
Oil Filter, Compressor 5-4
Oil Inlet Pressure 5-7
Oil Inlet Temperature 5-7
Oil Level Gauge 5-3
Oil Reservoir 5-6
Oil Reservoir Drain 2-2
Oil Separator 5-6
Oil Specifications 5-1
Oil System Check 5-7
Oil System, Compressor 5-1
Operating Air Pressure Adjustment 4-9
Operation Lights 4-6

Pressure Differential Gauging 5-6
Pressure Regulator 4-5
Prestart-up Instructions 3-1
Programmed Controller 4-6
Programmed Controller Battery Replacement 4-7
Programmed Controller Fuse Replacement 4-8
Programmed Controller, Trouble Shooting 9-2
Purge Air Valve 4-3

REBUILDING DATA (SECTION 10) 10-1
Regreasing Interval 2-6
Reservoir/Low Oil Pressure Switch 4-4
Running Clearances 10-1, 10-2

Safety Devices 4-1
Safety Precautions 1-4
Safety Valve 4-1
Selector Switch 4-5
Separator Indicator Pressure Button 4-2
Service Check List 8-1
Shutdown Lights 4-6
Shuttle Valve 4-3
Starter/Control Box 4-5
STARTING & OPERATING PROCEDURES (SECTION 3) 3-1
Stopping Unit 3-1
Subtractive Pilot 4-3
Synthetic Lubricants 5-1

Thermal Control Valve 5-4
TROUBLE SHOOTING (SECTION 9) 9-1

Vibration Switch 4-10

Water Flow Control Valve for Heat Exchanger 5-5
Water Flow Rates 2-4
Water Piping 2-5
Water Shutoff Valve 5-5
Wiring Diagrams 4-14, 4-15

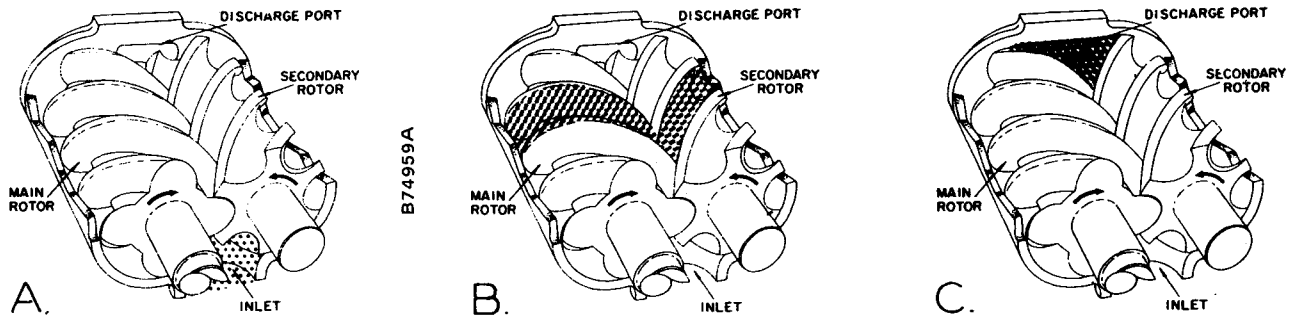

FIGURE 1-1. – COMPRESSION CYCLE

COMPRESSOR – The Gardner-Denver® "EC_" Electra-Saver II® compressor is a single stage, positive displacement rotary machine using meshing helical rotors to effect compression. Both rotors are supported between high capacity roller bearings located outside the compression chamber. Single width cylindrical roller bearings are used at the inlet end of the rotors to carry part of the radial loads. Tapered roller bearings at the discharge end locate each rotor axially and carry all thrust loads and the remainder of the radial loads.

COMPRESSION PRINCIPLE (Figure 1-1) – Compression is accomplished by the main and secondary rotors synchronously meshing in a one-piece cylinder. The main rotor has four (4) helical lobes 90° apart. The secondary rotor has six (6) matching helical grooves 60° apart to allow meshing with main rotor lobes.

The air inlet port is located on top of the compressor cylinder near the drive shaft end. The discharge port is near the bottom at the opposite end of the compressor cylinder. *Figure 1-1 is an inverted view to show inlet and discharge ports.* **The compression cycle** begins as rotors unmesh at the inlet port and air is drawn into the cavity between the main rotor lobes and the secondary rotor grooves (A). When the rotors pass the inlet port cutoff, air is trapped in the interlobe cavity and flows axially with the meshing rotors (B). As meshing continues, more of the main rotor lobe enters the secondary rotor groove, normal volume is reduced and pressure increases. Oil is injected into the cylinder by proprietary means to remove the heat of compression and seal internal clearances. The Electra-Saver II utilizes Gardner-Denver's exclusive Intensive Injection System to feed coolant into the compression chamber through dozens of small injection ports. This greatly improves the rate of heat exchange between the air/oil mixture with most of the injection and heat transfer occuring where the air has reached its highest pressure and greatest temperature. Hot spots in the compression cycle are eliminated. Volume reduction and pressure increase continues until the air/oil mixture trapped in the interlobe cavity by the rotors passes the discharge port and is released to the oil reservoir (C). Each rotor cavity follows the same "fill-compress-discharge" cycle in rapid succession to produce a discharge air flow that is continuous, smooth and shock-free.

AIR FLOW IN THE COMPRESSOR SYSTEM (Figure 1-5) – Air enters the air filter and passes through the inlet unloader valve to the compressor. After compression, the air/oil mixture passes into the oil reservoir where most of the entrained oil is removed by velocity change and impingement and drops back into the reservoir. The air and remaining oil then passes through the oil separator, the separated oil is returned to the system through tubing connecting the separator and compressor. The air passes through the reservoir discharge manifold, minimum pressure valve and discharge check valve to the plant air lines.

LUBRICATION, COOLING AND SEALING – Oil is forced by air pressure from the oil reservoir through the oil cooler, thermostatic mixing valve, and oil filter and discharges into the compressor main oil gallery. A portion of the oil is directed through internal passages to the bearings, gears and shaft oil seal. The balance of the oil is injected directly into the compression chamber to remove heat of compression, seal internal clearances and lubricate the rotors.

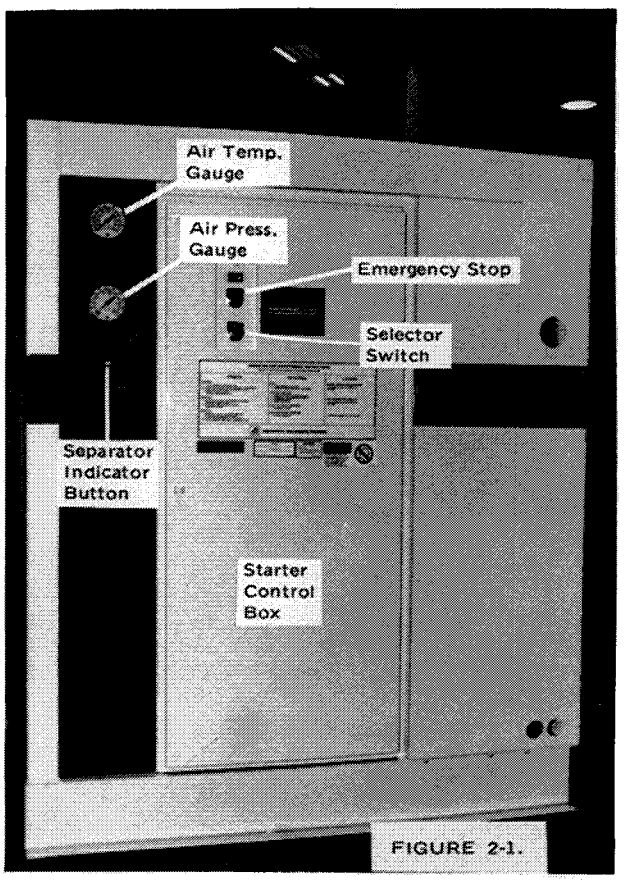

FIGURE 2-1.

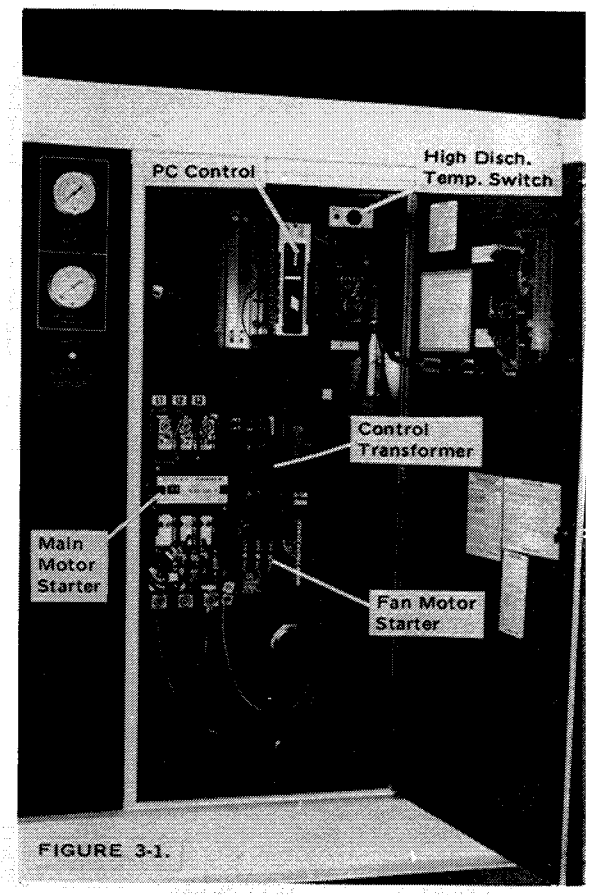

FIGURE 3-1.

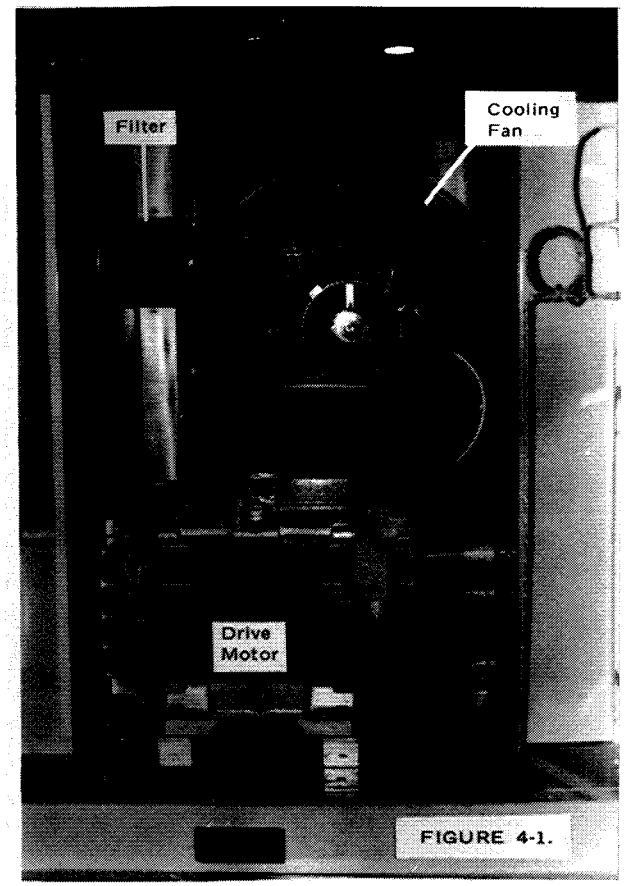

FIGURE 4-1.

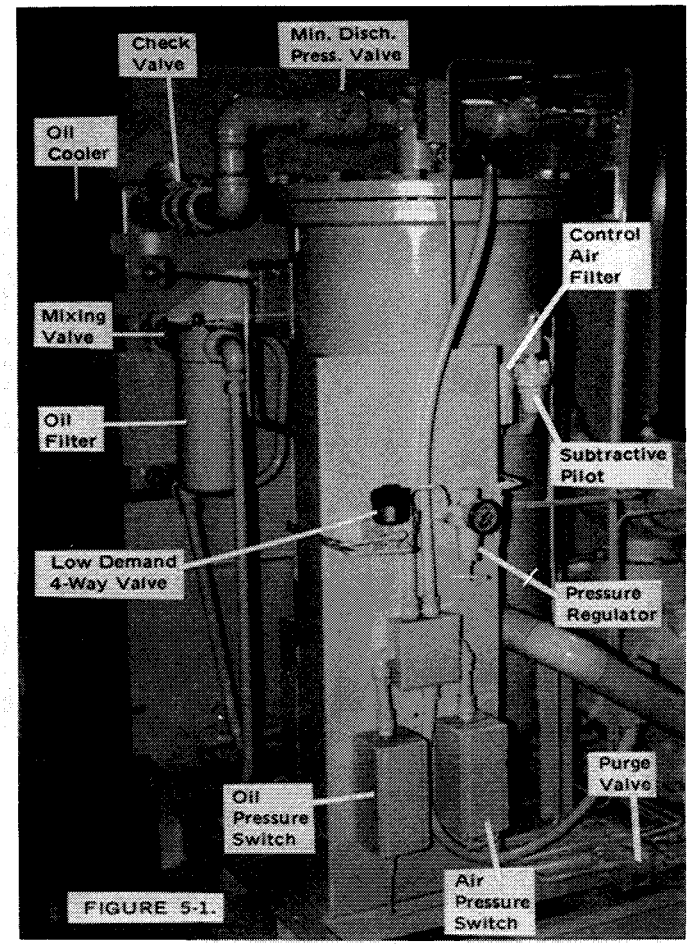

FIGURE 5-1.

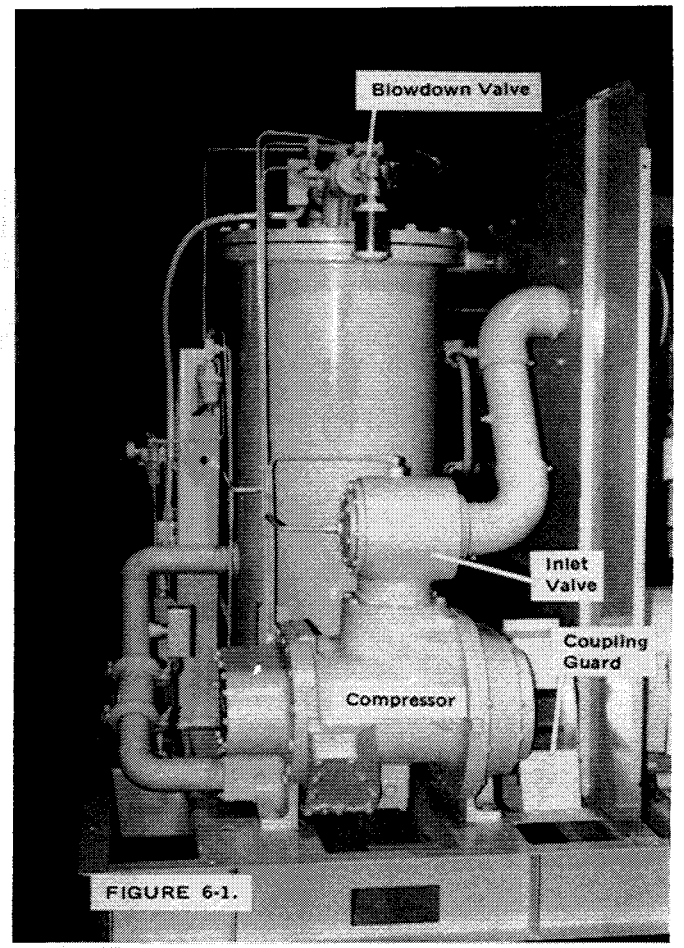

FIGURE 6-1.

SAFETY PRECAUTIONS

Safety is everybody's business and is based on your use of good common sense. All situations or circumstances cannot always be predicted and covered by established rules. Therefore, use your past experience, watch out for safety hazards and be cautious.

Some general safety precautions are given below:

⚠ WARNING

FAILURE TO OBSERVE THESE NOTICES COULD RESULT IN DAMAGE TO EQUIPMENT.

- *STOP THE UNIT IF ANY REPAIRS OR ADJUSTMENTS ON OR AROUND THE COMPRESSOR ARE REQUIRED.*
- *ALL COMPRESSED AIR SUPPLY HOSES EXCEEDING 1/2 INCH INSIDE DIAMETER SHOULD HAVE AN EXCESS FLOW VALVE. (OSHA REGULATION, SECTION 1518.302)*
- *DO NOT EXCEED THE RATED MAXIMUM PRESSURE VALUES SHOWN ON THE NAMEPLATE.*
- *DO NOT OPERATE UNIT IF SAFETY DEVICES ARE NOT OPERATING PROPERLY. CHECK PERIODICALLY. NEVER BYPASS SAFETY DEVICES.*

⚠ DANGER

FAILURE TO OBSERVE THESE NOTICES COULD RESULT IN INJURY TO OR DEATH OF PERSONNEL.

- *KEEP FINGERS AND CLOTHING AWAY FROM REVOLVING FAN, DRIVE COUPLING, ETC.*
- *DO NOT USE THE AIR DISCHARGE FROM THIS UNIT FOR BREATHING – NOT SUITABLE FOR HUMAN CONSUMPTION.*
- *DO NOT LOOSEN OR REMOVE THE OIL FILLER PLUG, DRAIN PLUGS, COVERS, THE THERMOSTATIC MIXING VALVE OR, BREAK ANY CONNECTIONS, ETC. IN THE COMPRESSOR AIR OR OIL SYSTEM UNTIL THE UNIT IS SHUT DOWN AND THE AIR PRESSURE HAS BEEN RELIEVED.*
- *ELECTRICAL SHOCK CAN AND MAY BE FATAL.*
- *COMPRESSOR UNIT MUST BE GROUNDED IN ACCORDANCE WITH THE NATIONAL ELECTRICAL CODE. A GROUND JUMPER EQUAL IN SIZE TO THE EQUIPMENT GROUND CONDUCTOR MUST BE USED TO CONNECT THE COMPRESSOR MOTOR BASE TO THE UNIT BASE.*
- *FAN MOTORS HAVE BEEN AND MUST REMAIN GROUNDED TO THE MAIN BASE THROUGH THE STARTER MOUNTING PANEL IN ACCORDANCE WITH THE NATIONAL ELECTRICAL CODE.*
- *OPEN MAIN DISCONNECT SWITCH BEFORE WORKING ON THE CONTROL.*
- *DISCONNECT THE COMPRESSOR UNIT FROM ITS POWER SOURCE BEFORE WORKING ON THE UNIT – THIS MACHINE IS AUTOMATICALLY CONTROLLED AND MAY START AT ANY TIME.*

SECTION 2

INSTALLATION

GENERAL – On receipt of the unit, check for any damage that may have been incurred during transit. Report any damage or missing parts as soon as possible.

CAUTION

DO NOT ELECTRIC WELD ON THE COMPRESSOR OR BASE; BEARINGS CAN BE DAMAGED BY PASSAGE OF CURRENT.

LIFTING UNIT – Proper lifting and/or transporting methods must be used to prevent damage.

CAUTION

LIFT COMPRESSOR UNIT BY BASE ONLY. DO NOT USE OTHER PLACES SUCH AS ENCLOSURE, MOTOR, COMPRESSOR OIL DISCHARGE MANIFOLD AND PIPING AS LIFTING POINTS.

DANGER

THE EYEBOLTS OR LUGS PROVIDED ON THE MOTOR ARE FOR LIFTING THE MOTOR ONLY AND SHOULD NOT BE USED TO LIFT ANY ADDITIONAL WEIGHT. ALL EYEBOLTS MUST BE SECURELY TIGHTENED. WHEN LIFTING THE MOTOR THE LIFTING ANGLE MUST NOT EXCEED 15 DEGREES. FAILURE TO OBSERVE THIS WARNING MAY RESULT IN DAMAGE TO EQUIPMENT OR PERSONAL INJURY.

Lifting slots are provided in the base for towmotor use. Unit may also be moved into location by rolling on bars.

LOCATION – The compressor should be installed, whenever possible, in a clean, well-lighted, well-ventilated area with ample space all around for maintenance. Select a location that provides a cool, clean, dry source of air. In some cases it may be necessary to install the air filter at some distance from the compressor to obtain proper air supply.

Both the air-cooled and water-cooled units require cooling air as well as air to the compressor inlet. Proper ventilation MUST be provided; hot air must be exhausted from the compressor operating area. A typical inlet-outlet air flow arrangement is shown in Figure 1-2.

AIR-COOLED UNIT – A combination oil/aftercooler is supplied as standard equipment on all air-cooled units. The air-cooled unit with the standard enclosure requires sufficient air flow, Figure 2-2, for the compressor oil/after cooling system and for electric motor cooling. Air is drawn into the unit at the motor side of the enclosure and is exhausted at the oil cooler side. Do not block the air flow to and from the unit. Allow three and one-half (3-1/2) feet to the nearest obstruction on the starter end and control box end of the unit. Allow two (2) feet to the nearest obstruction above and on other sides of unit. For continuous efficiency, oil cooler cores must be periodically cleaned with either vacuum or compressed air. If wet cleaning is required, shield motor and spray on a mild soap solution and flush with clear water.

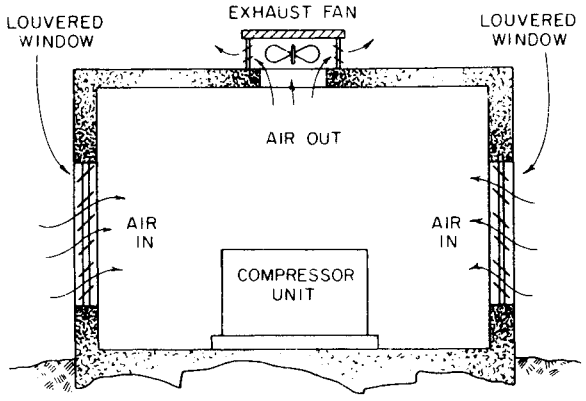

FIGURE 1-2. – TYPICAL COMPRESSOR ROOM

WARNING

FOR ALUMINUM OIL COOLERS, DO NOT USE ANY CLEANING SOLUTION THAT IS NOT COMPATIBLE WITH ALUMINUM. USE OF IMPROPER SOLUTION MAY RESULT IN DAMAGE TO COOLER.

WATER-COOLED UNIT – The water-cooled unit with the standard enclosure requires sufficient air flow, Figure 2-2, for electric motor cooling. Air is drawn into the unit at the top of the enclosure and is exhausted at the motor

Minimum Air Flow* For Compression And Cooling (Cubic Feet/Minute)		
	Air Cooled	Water Cooled
All Models	11950 cfm	1700 cfm

* 80° F. inlet oil.

FIGURE 2-2.

side. Do not block air flow to and from the unit. Allow three and one-half (3-1/2) feet to the nearest obstruction on the starter end and control box side of the unit. Allow two (2) feet to the nearest obstruction above and on other sides of the unit.

FOUNDATION – The Electra-Saver II® compressor requires no special foundation, but should be mounted on a smooth, solid surface. Whenever possible install the unit near level. Temporary installation may be made at a maximum 20° angle lengthwise or 20° sidewise.

Mounting bolts are not normally required. However, installation conditions such as piping rigidity, angle of tilt, or danger of shifting from outside vibration or moving vehicles may require the use of mounting bolts and shims to provide uniform support for the base. Coupling alignment **MUST** be checked after installation.

OIL RESERVOIR DRAIN – The oil drain is piped from the bottom of the reservoir to the side of the frame. This drain is approximately six (6) inches above the floor level. If this height is not sufficient to conveniently drain the oil some other methods of providing oil drain are:

1. Elevate the compressor unit on raising blocks to obtain the desired drain height.

CAUTION

IF THE COMPRESSOR UNIT BASE IS RAISED ABOVE FLOOR LEVEL, THE SPACE BETWEEN THE FLOOR AND THE BASE BOTTOM MUST BE CLOSED WITH SOLID MATERIAL ALL AROUND TO PREVENT RE-CIRCULATION OF HOT AIR FROM THE OIL COOLER END AND OVER TEMPERATURE OPERATION.

2. Construct an oil sump or trough below the floor level and pump or bail the drained oil.

3. Pump oil from the reservoir filler opening or drain to a container.

ENCLOSURE – The compressor, electric motor, oil cooler and aftercooler are mounted inside the enclosure. The enclosure directs the cooling air flow across the motor to the compressor air filter and through the coolers.

Service doors are provided for access to the motor, starters and compressor. Be sure to allow enough space around the unit for the doors to open completely.

Any of the enclosure doors may be removed by opening the door and lifting it up slightly to disengage the lower hinge pin from its bracket. The top pin can then be disengaged by lowering the door. The motor inspection/air filter service panel is held by two latches and lifts away from the enclosure. The air outlet panel is attached by screws to the enclosure and is not readily removable.

INSTALLATION FOR COLD WEATHER OPERATION – It is recommended that whenever possible the unit be installed inside a shelter that will be heated to temperatures above freezing (32° F, 0° C). This will eliminate many of the problems associated with operating the units outside in cold climates where freezing rain, drifting snow, freezing condensate and bitter cold temperatures are encountered.

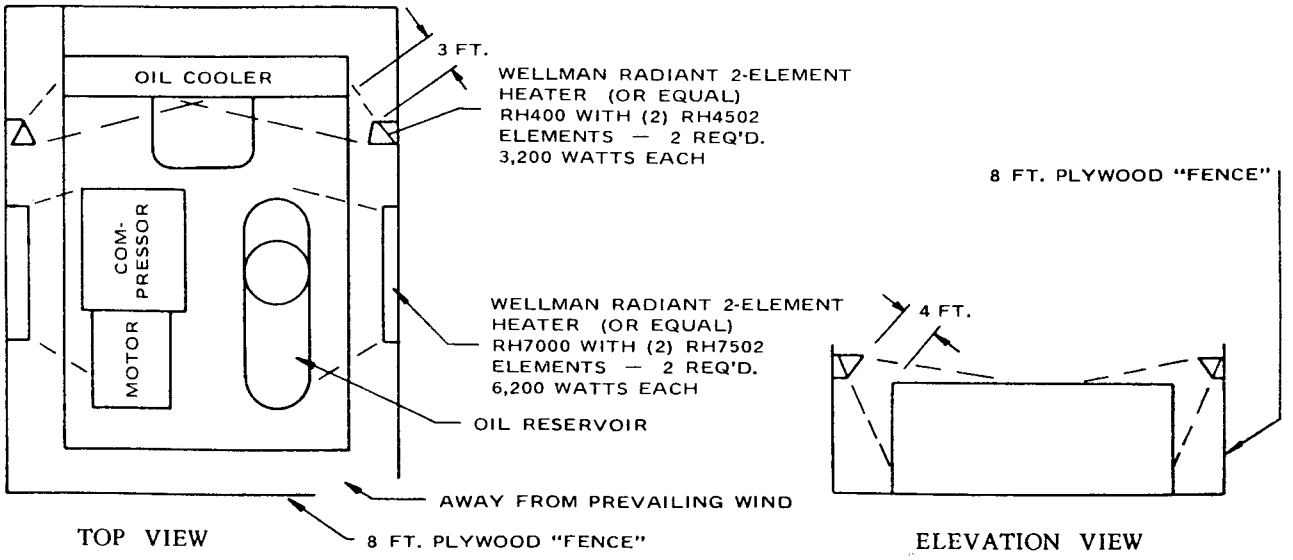

FIGURE 3-2.

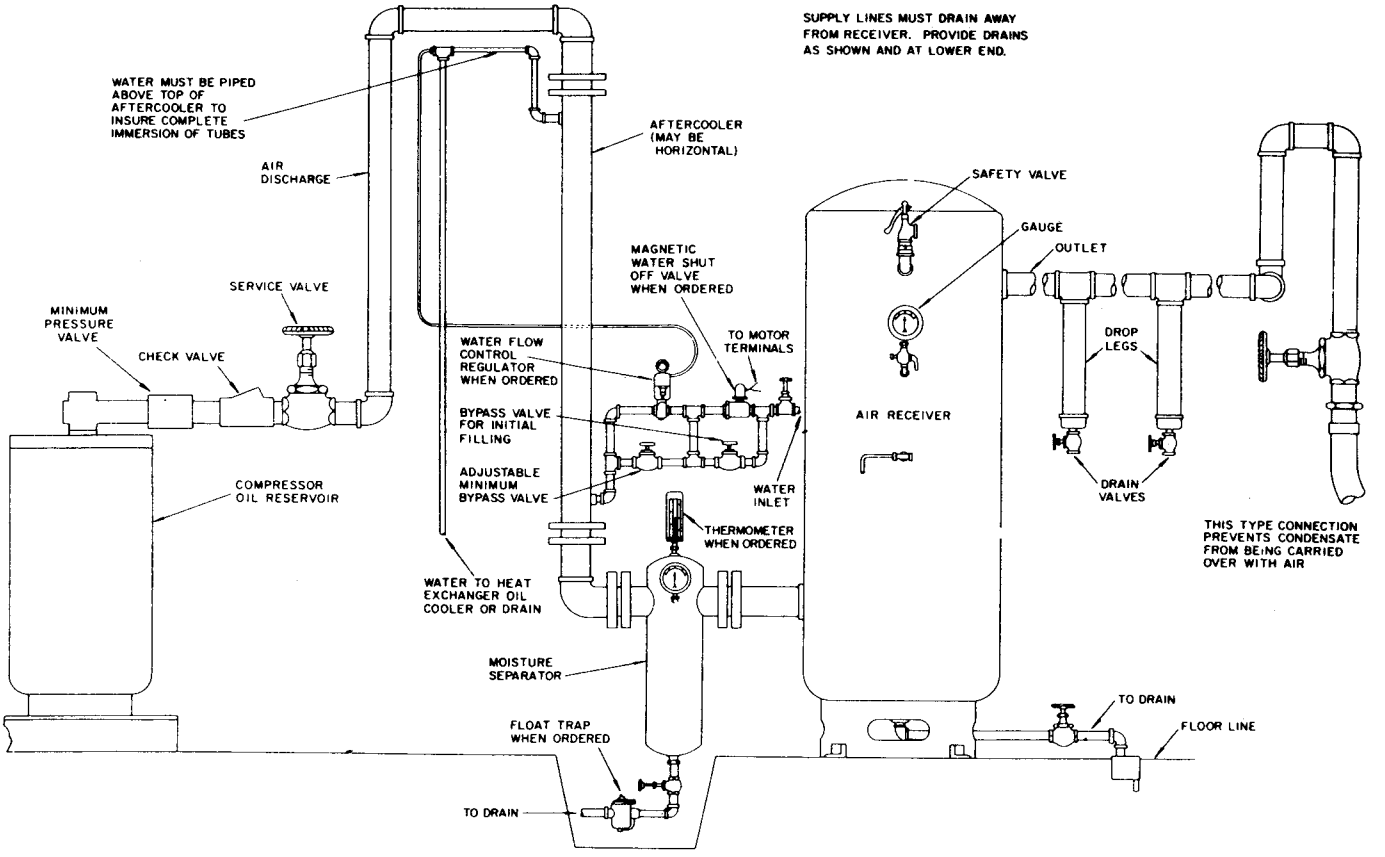

FIGURE 4-2. – AUXILIARY ACCESSORIES

When an outside installation must be made, the precautions required will depend on how severe the environment. The following are general guidelines for outside installations:

Cold Weather (Down To -10° F)

1. Be sure all control lines, drains and traps are heated to avoid freezing of condensate. Heat tape with thermostat control is generally satisfactory for this purpose and can be obtained at various local plumbing or hardware outlets at nominal cost.

2. If an air-cooled aftercooler is to be used, provisions to bypass the aftercooler should be made. Since cold air contains very little moisture, successful operation can be achieved without the aftercooler.

3. Provide at least some simple shelter such as a plywood windbreak to protect against drifting snow.

4. Use only Gardner-Denver® GD800 lubricant.

5. Monitor unit carefully during start-up and operation to be sure it is functioning normally.

6. Specify NEMA 4 enclosure for electrical devices.

Extreme Cold Weather Operation (Down To -40° F)

In addition to the above, the following should be provided:

1. It will probably be necessary to provide shutters or to block off part of the cooler in some manner since the cooler is greatly oversized for operation in these low temperatures. Since shutters are not provided as a factory option, blocking off a portion of the cooler with plywood should be satisfactory.

2. Lo-Demand operation should not be used in extreme environments.

3. Some means of providing heat to the oil reservoir and cooler during shutdown should be provided. There are various methods to accomplish this, but since openings are not provided for sump heaters, the use of radiant heaters is recommended. The heaters should be sized to provide at least a -10° F environment for the coolers, motor and sump. Figure 3-2 shows how these might be located in a typical installation and sizes required.

Remember unsheltered (outside) installations should be avoided where possible. Installation next to a heated building where enough heat can be used to keep the compressor room above freezing will save many complications in the operation and installation of the unit.

Refer to Engineering Data Sheet 13-9-411 for the advantages of using the heat recovered from rotary compressors. This heat recovery could easily pay for an adequate shelter for the unit.

AUXILIARY AIR RECEIVER – An auxiliary air receiver is not required if the piping system is large and provides sufficient storage capacity to prevent rapid cycling. When used, an air receiver should be of adequate size, provided with a relief valve of proper setting, a pressure gauge and a means of draining condensate. Figure 4-2 shows a typical air receiver and auxiliary accessories.

MOISTURE SEPARATOR/TRAP – When unit is equipped with a built-in aftercooler, a moisture separator and trap is furnished with the unit.

CONTROL PIPING – Control piping is not necessary since the Electra-Saver II® unit is factory wired and piped for the control system specified.

INLET LINE – Where an inlet line is used between the air filter and the compressor, it must be thoroughly cleaned on the inside to prevent dirt or scale from entering the compressor. **If welded construction is used, the line must be shot blasted and cleaned to remove welding scale.** In either case, the inlet line must be coated internally by galvanizing or painting with a moisture and oil-proof sealing lacquer. Up to ten (10) feet in length, the inlet line should be the full size of the inlet opening on the compressor. If an extra-long line is necessary, the pipe size should be increased accordingly:

Length of Inlet Line	Diameter of Pipe Size
0 to 10 Feet	Same As Compressor Inlet Opening
10 to 17 Feet	One Size Larger Than Inlet Opening
17 to 38 Feet	Two Sizes Larger Than Inlet Opening

Accessibility for inlet air filter servicing must be considered when relocating the filters from the unit to a remote location.

DISCHARGE SERVICE LINE – The discharge service line connection on both water-cooled and air-cooled units is made at the right hand corner of the unit, viewed from the control panel side. When manifolding two or more Electra-Saver II units on the same line, each unit is isolated by the check valve in the unit discharge line. If an Electra-Saver II unit is manifolded to another compressor, be sure the other compressor has a check valve in the line between the machine and the manifold. If an Electra-Saver II and a reciprocating compressor are manifolded together, an air receiver must be located between the two units.

OIL COOLER

HP	Model	Water Temperature To Heat Exchanger				Maximum Water Flow	Approximate Water Pressure Drop @ 90° F Water Flow (PSI)
		60° F	70° F	80° F	90° F		
60	ECMSKC	5.0	6.2	8.3	12.5	40.8	2.0
75	ECMSLC	6.9	8.6	11.5	17.2	60.6	1.5
100	ECPSMC	9.2	11.5	15.3	22.9	40.8	5.0

AFTERCOOLER

HP	Model	Water Temperature To Heat Exchanger				Maximum Allowable Flow (GPM)	Approximate Water Pressure Drop
		60° F	70° F	80° F	90° F		
60	ECMSKC	0.8	1.0	1.4	2.1	26.0	Less than 1 PSI for any flow rate shown in table.
75	ECMSLC	1.2	1.5	2.0	3.0	26.0	
100	ECPSMC	1.7	2.1	2.8	4.1	26.0	

Flow rates are based on 110° F maximum allowable outlet water temperature. Higher water outlet temperatures can lead to heat exchanger malfunction by causing fouling in the last water pass.

FIGURE 5-2. – HEAT EXCHANGER (OIL COOLER-AFTERCOOLER) APPROXIMATE WATER FLOW
U.S. Gallons/Minute

DANGER

DO NOT USE THE AIR DISCHARGED FROM THIS UNIT FOR BREATHING – IT IS NOT SUITABLE FOR HUMAN CONSUMPTION. USE OF THIS AIR FOR BREATHING MAY RESULT IN PERSONAL INJURY OR DEATH.

BLOWDOWN VALVE PIPING – The blowdown valve is fitted with a muffler for operation indoors. If the installation requires, the muffler may be removed and the blowdown valve piped to the outside with a pipe size the same as the blowdown valve outlet connection.

WATER PIPING (Water-Cooled Heat Exchanger Models Only) – On machines equipped with water-cooled heat exchangers, the water inlet and outlet connections are located near the bottom right hand corner of the unit, viewed from the control panel side.

The water source should be capable of supplying up to the maximum flow shown in Figure 5-2 at a minimum pressure of 40 psig. The water flow rates shown in Figure 5-2 are approximate and a guide to sizing piping, cooling tower and other water system equipment.

The heat exchanger system is designed to operate with water inlet temperatures from 60° F to 90° F and a water outlet temperature not to exceed 110° F. If water cooler than 60° F is used, high water outlet temperatures (over 110° F) will be experienced along with shortened heat exchanger life caused by tube fouling and corrosion. If water warmer than 90° F is used, higher compressor oil inlet temperatures and high water usage will result.

Most water systems will require control of impurities; filtration softening or other treatment. See "Compressor Oil Cooler – Water-Cooled Heat Exchanger" for more information on the water system.

SERIES PIPING (Figure 6-2) – Water flow must be through aftercooler first for effective cooling of discharge air and is so piped on the standard water-cooled unit.

PARALLEL PIPING (Figure 7-2) – A separate water control valve is required to control the discharge air temperature. If a remote (externally mounted) water-cooled aftercooler is piped in parallel with the heat exchanger, provide a separate water control valve for the aftercooler and pipe separate inlet water lines to both the aftercooler and heat exchanger.

The water control valve is to be adjusted to maintain oil out of the heat exchanger within the 140° -150° F range regardless of inlet water flow or temperature. See Section 5 for adjustment instructions and maximum allowable lubricant temperature.

ELECTRICAL WIRING – Standard Units – The Electra-Saver II® compressor is factory wired for all starter to motor and control connections for the voltage specified on the order. It is necessary only to connect the unit starter to the correct power supply. See Section 4 for general wiring diagrams. These diagrams are general only – use the wiring diagrams supplied with the compressor for exact connections. The standard unit is supplied with an open drip-proof motor, a NEMA 3R starter and control enclosure. See "Location" paragraph for distance to nearest obstruction on starter/control box side of the unit.

GROUNDING – Equipment must be grounded in accordance with Table 250-95 of the National Electrical Code.

MOTOR LUBRICATION – Long time satisfactory operation of an electric motor depends in large measure on proper lubrication of the bearings. The following charts show

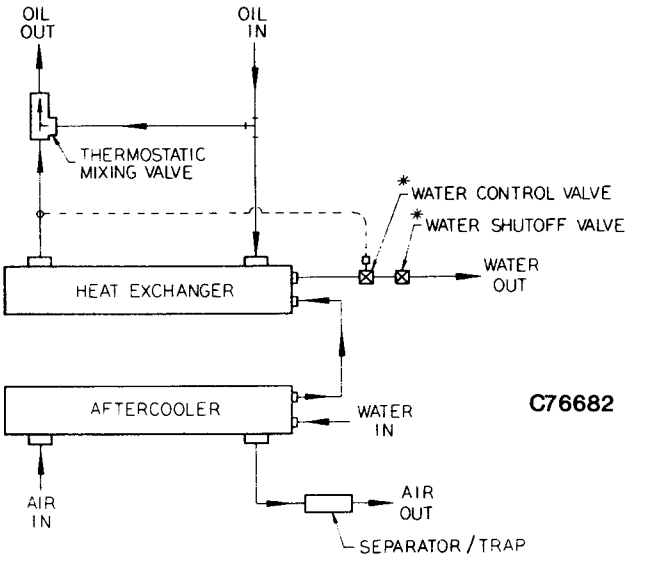

* (OPTIONAL) WATER CONTROL VALVE AND WATER SHUTOFF VALVE MUST BE ORDERED SEPARATELY.

FIGURE 6-2. – SERIES PIPING

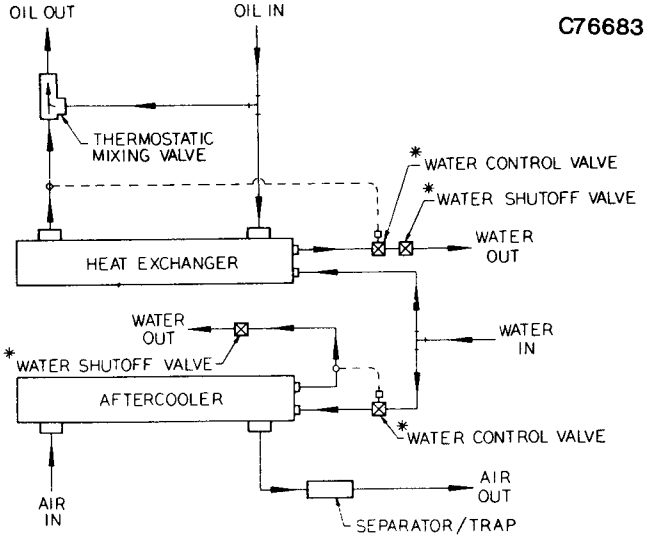

* (OPTIONAL) WATER CONTROL VALVE AND WATER SHUTOFF VALVE MUST BE ORDERED SEPARATELY.

FIGURE 7-2. – PARALLEL PIPING

recommended grease qualities and regreasing intervals for ball bearing motors. For additional information refer to the motor manufacturer's instructions.

The following procedure should be used in regreasing:

1. Stop the unit.
2. Disconnect the unit from the power supply.
3. Remove the relief plug and free hole of hardened grease.
4. Wipe the lubrication fitting clean and add grease with a hand-operated grease gun.
5. Leave the relief plug temporarily off. Reconnect unit and run for about 20 minutes to expell the excess grease.
6. Stop the unit. Replace the relief plug.
7. Restart the unit.

GREASE RECOMMENDATIONS

	Standard Service	High Temperature
Worked Penetration	265-296	220-240
Oil Viscosity, SSU At 100° F.	400-550	475-525
Soap Type	Lithium	Lithium
N-H Bomb, Minimum Hours For 20 PSI Drop At 210° F.	750	1000
Bleeding, Maximum Weight % In 500 Hours 212° F.	10	3
Rust Inhibiting	Yes	Yes

REGREASING INTERVAL

Type of Service	Typical Example	Rating	Relubrication Interval
Standard	One- Or Two-Shift Operation	150 HP and Below	18 Months
Severe	Continuous Operation	150 HP and Below	9 Months
Very Severe	Dirty Location, High Ambient Temperature	150 HP and Below	4 Months

SECTION 3

STARTING & OPERATING PROCEDURES

PRESTART-UP INSTRUCTIONS – A new unit as received from the factory has been prepared for shipping only. Do not attempt to operate the unit until checked and serviced as follows:

1. **Compressor Oil** – Check oil level in the reservoir. Add oil only if the oil level gauge reads in the red ADD OIL range. Do not mix different type oils. Unit is shipped filled with Gardner-Denver® GD800 Lubricating Coolant which is suitable for the first 2000 hours under normal operating conditions.

   REPLACE OIL FILTER EVERY 1000 HOURS.

   Initial fill, or filling after a complete draining of the system, may show the oil level in the red EXCESS OIL range. After start-up, the oil will fall into the operating range as system components are filled. If necessary, add oil to bring the level into the center of the RUN range when the unit is operating at full load and normal operating pressure, see Figure 3-5.

DANGER

ALWAYS STOP THE UNIT AND RELEASE AIR PRESSURE BEFORE REMOVING OIL FILLER PLUG. FAILURE TO RELEASE PRESSURE MAY RESULT IN PERSONAL INJURY OR DEATH.

   During unloaded operation and after shutdown, the system will partially drain back into the oil reservoir and the oil level may read higher than when operating on load. DO NOT DRAIN OIL TO CORRECT; on the next loaded cycle or start, oil will again fill the system and the gauge will indicate the operating level.

2. **Air Filter** – Inspect the air filter to be sure it is clean and tightly assembled. Refer to Section 6, "Air Filter", for complete servicing instructions. Be sure the inlet line, if used, is tight and clean.

3. **Alignment** – Check all bolts and cap screws for tightness. Check coupling alignment; refer to Section 7, "Coupling", for procedure.

4. **Piping** – Refer to Section 2, "Installation", and make sure the piping meets all recommendations.

5. **Electrical** – Check the wiring diagrams furnished with the unit to be sure it is properly wired. See Section 4, "Controls and Instruments", for general wiring diagrams and Section 2 for installation instructions.

6. **Rotation** – Check the motor rotation by momentarily jogging the motor. Compressor drive shaft rotation is clockwise standing at the motor end.

WARNING

DO NOT REPEATEDLY JOG THE MOTOR UNLESS ROTATION IS CORRECT. SEVERE COMPRESSOR DAMAGE CAN RESULT.

7. **System Pressure** – Set the inlet valve subtractive pilot and/or operating air pressure switch to the desired unload pressure and differential. DO NOT EXCEED MAXIMUM OPERATING PRESSURE ON COMPRESSOR NAMEPLATE. See Section 4, "Controls and Instruments", for procedure.

8. **Operating Mode** – Refer to Section 4 for detailed information on the control system.

9. **Enclosure** – Check for damaged panels or doors. Check all screws and latches for tightness. Be sure doors are closed and latched.

STARTING THE UNIT – OBSERVE UNIT COLD OR HOT STARTING PROCEDURES

Unit Cold – Close the air service valve (furnished by customer) between the main air system and the unit check valve. If the unit is a water-cooled heat exchanger model, open any manual water inlet wide open. Start the unit by turning the selector switch to OFF/RESET (if necessary) and then directly to the desired operating mode. Run for approximately one minute and then open the air service valve. Since the unit is equipped with a minimum (65 psig) pressure discharge valve, no special procedure to maintain unit reservoir pressure is required.

Unit Hot – No warm-up period is required. Close the air service valve (furnished by customer). If the unit is a water-cooled heat exchanger model, open any manual water inlet valves wide open. Start the unit by turning the selector switch to OFF/RESET (if necessary) and then directly to the desired operating mode. Open the air service valve.

DAILY CHECK – Refer to Section 8, "Maintenance Schedule".

STOPPING THE UNIT – Close the air service valve (furnished by customer), allow the unit to build up to full unloaded pressure and turn the selector switch directly to OFF/RESET. Stopping the unit at a pressure below full unloaded may cause oil carry-over. The oil reservoir will automatically blow down as the motor stops. If the unit is a water-cooled heat exchanger type, close any manual water inlet valves. Open the air service valve.

SECTION 4

CONTROLS & INSTRUMENTS

GENERAL – The "EC_" Electra-Saver II® compressor is equipped with the optional **SELECTRA CON** control system. The "EC_" Electra-Saver II compressor unit is prewired with the starter mounted and all starter to motor and control connections for the voltage specified on the order. It is necessary only to connect the compressor unit to the correct power supply, to the shop air line and to the shop water line, if the compressor is water cooled. The standard compressor unit consists of the compressor, oil reservoir, oil cooling system, and oil filters, the motor enclosure and control system specified, instrument panel and NEMA 3R starter/control box all mounted on a steel base.

Control Voltage – The control voltage is 115 volts regardless of power supply voltage. A transformer in the starter/control box is connected to change the power supply voltage to 115 volt control voltage.

SAFETY DEVICES – All units incorporate these safety devices.

Motor Protection Devices – Overload heaters are furnished for the starter in the voltage range specified. There are three (3) overloads in the starter of proper size for the starter and its enclosure. When replacing or changing overloads, be sure to select them from a 3-overload heater table, since the use of a third overload derates each overload for a given enclosure due to the extra heat. An overload from a 2-overload heater table would be undersize.

The overload heaters have a high-low adjustment of ±6% determined by the position of the heater in the overload relay. The high or low position is shown on the overload heater table inside the starter enclosure. Motor nameplate amperage is used to determine high-low position.

High Discharge Temperature Switch – The compressor unit is protected from high discharge temperature by a two-probe adjustable switch. One probe is located in the discharge pipe between the compressor and the oil reservoir to sense compressor discharge air/oil mixture temperature. The second probe is located in the final discharge manifold and senses the temperature of the air at the oil separator. The switch is located inside the control box (Figure 3-1); the shutdown temperature is set on the adjustable dial. If the temperature of the air at either of the probes exceeds the temperature set on the dial, the switch will stop the unit. Turn the selector switch to OFF/RESET, then to desired mode to restart compressor.

HIGH DISCHARGE TEMPERATURE SWITCH CONDITION CHART

"A" indicates Temperature Condition at Compressor Discharge.
"B" indicates Temperature Condition at Oil Separator.
"C" indicates Probe Condition.

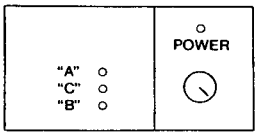

CONDITION	POWER ON	"A"	"B"	"C"
POWER OFF	OFF	OFF	OFF	OFF
NORMAL TEMPERATURE	RED	RED	RED	OFF
COMPRESSOR HIGH TEMPERATURE	RED	OFF	RED	OFF
SEPARATOR HIGH TEMPERATURE	RED	RED	OFF	OFF
COMPRESSOR PROBE OPEN	RED	OFF	RED	GREEN
SEPARATOR PROBE OPEN	RED	RED	OFF	GREEN
COMPRESSOR PROBE SHORTED	RED	OFF	RED	RED
SEPARATOR PROBE SHORTED	RED	RED	OFF	RED
COMPRESSOR PROBE SHORTED/ SEPARATOR PROBE OPEN	RED	OFF	OFF	ORANGE
COMPRESSOR PROBE OPEN/ SEPARATOR PROBE SHORTED	RED	OFF	OFF	ORANGE

FIGURE 1-4.

CAUTION

THIS ADJUSTABLE SWITCH DIAL MUST NOT BE SET HIGHER THAN 225° F.

DO NOT CONTINUE TO RESET THE CIRCUIT IF THE SAME MALFUNCTION OCCURS WITHIN A SHORT PERIOD OF TIME. FIND AND CORRECT THE TROUBLE BEFORE RESUMING OPERATION.

In addition to protecting the unit from damage or failure resulting from high air temperature, the switch also incorporates four (4) indicator lights which show the point of high temperature and/or the condition of the temperature probes. This information is shown in Figure 1-4 and on the decal inside the control box door.

The High Air Temperature Switch may be checked periodically to assure proper operation. To check with the unit running, turn the dial on the switch to the temperature indicated by the discharge temperature gauge. Unit should shutdown. If it does not, check the temperature gauge accuracy and indicator lights – refer to the condition decal on the control box door for the malfunction. After operational check, always reset switch dial to the proper setting (225° F).

Safety Valve – A pressure relief valve is installed in the final discharge manifold and set at the factory to approximately 120%

of the specified operating pressure for protection against overpressure. Periodic checks should be made to insure its proper operation.

CAUTION

NEVER OPERATE THE UNIT WITHOUT A PROPER SAFETY VALVE SETTING.

Blowdown Valve (Figure 5-1) — The blowdown valve releases pressure from the oil reservoir. See description under "Air Control Components" in this section for construction and operation information.

INSTRUMENT PANEL (Figure 2-1) — The following instruments and gauges are located on the instrument panel. Optional instruments are noted. See Figure 2-4 for schematic tubing diagram showing connection of instruments and gauges.

Discharge Air Temperature Gauge (Figure 2-1) — This direct reading gauge indicates compressor discharge air temperature. Normal operating temperature is 180-200° F. Maximum discharge air temperature is limited to 225° F by the High Discharge Temperature Switch (see description under "Safety Devices" in this section).

Discharge Air Pressure Gauge (Figure 2-1) — This direct reading air pressure gauge indicates final discharge air pressure at the discharge manifold. Minimum air pressure is limited by the minimum discharge pressure valve to 65 psig. Maximum air pressure is controlled by the subtractive pilot.

Separator Indicator Pressure Button (Figure 2-1) — This button allows the discharge air pressure guage to be used to measure separator differential. See Section 5, "Lubrication, Oil Cooler, Oil Filter and Separator" for instructions.

Air Filter Indicator (Optional) — An air filter indicator is located on the instrument panel and indicates when the air filter requires servicing. See Section 6, "Air Filters", for instructions on servicing the air filter.

AIR CONTROL COMPONENTS — All units incorporate the following air control components unless otherwise noted. See Figure 2-4 for schematic tubing diagram.

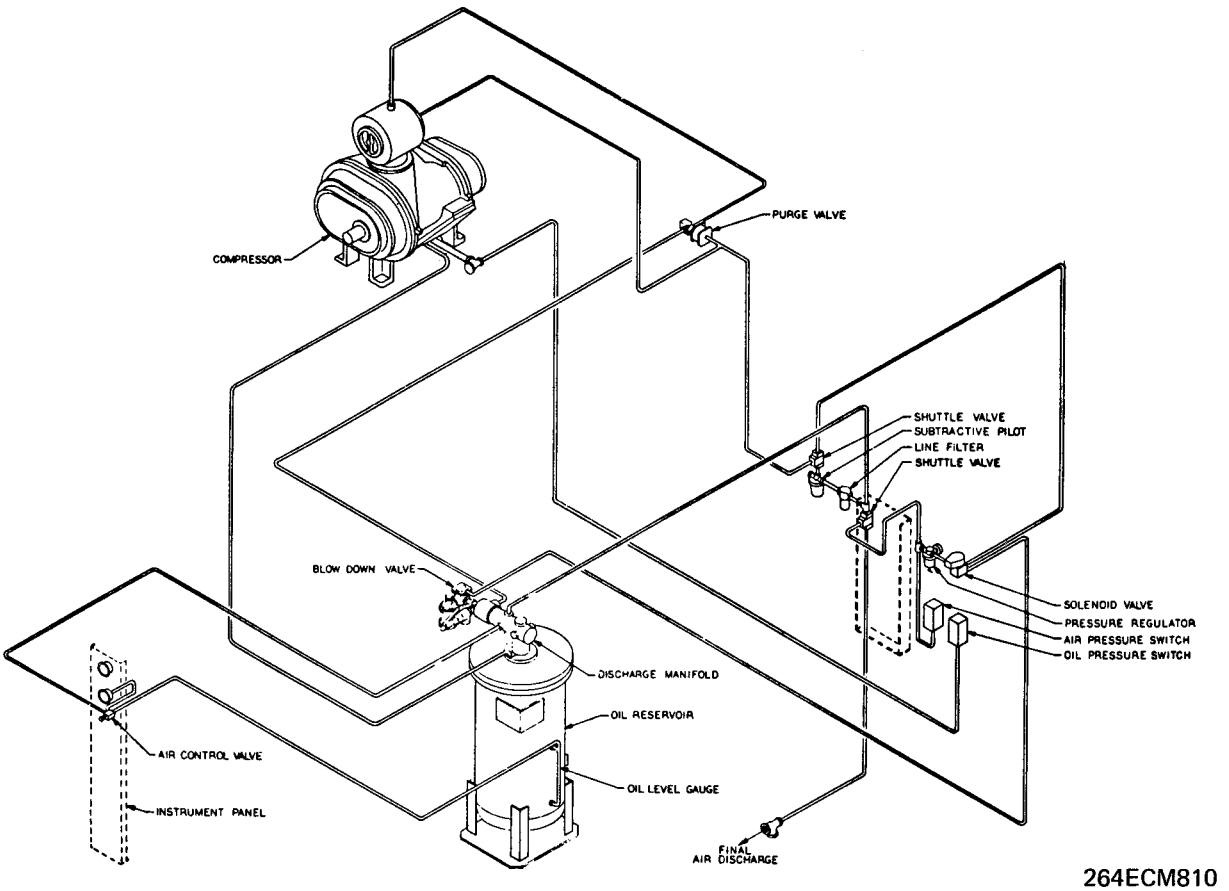

FIGURE 2-4. — SCHEMATIC TUBING DIAGRAM

Subtractive Pilot – The subtractive pilot is an adjustable, spring-loaded diaphragm valve that controls downstream (control) pressure in relation to the upstream (discharge) pressure.

The downstream pressure is maintained equal to the upstream pressure minus a constant which is adjustable. In the example shown in Figure 3-4, the downstream pressure equals the upstream pressure minus 95 psi. When the upstream pressure rises to 100 psig, the downstream pressure rises to 5 psig. This 1 to 1 psi rise is constant above the set point.

Below the set point, the valve seat is closed and the downstream pressure is vented. In the example of Figure 3-4, the downstream pressure is vented below 95 psig.

Figure 4-4 shows a schematic cross section of the subtractive pilot with the valve seat closed and the downstream line vented. Figure 5-4 shows the pilot with the valve seat open, holding a downstream pressure which is adjustable with the screw. In this position it is normal for the valve to continually bleed air through the small vent hole in the bowl. The pilot can be adjusted from 65 to 150 psig.

Moisture, oil and dirt in the control system lines and components can cause the setpoint of the subtractive pilot to shift or be erratic. Daily draining of the control air filters will minimize any problems. The subtractive pilot can be disassembled and the diaphragm and ports cleaned when necessary.

See "Control System Operation" in this section for a description of how the subtractive pilot responds during operation. See "Operating Air Pressure Adjustment" in this section for instructions on adjusting the subtractive pilot.

Control Air Filter – A control air filter/trap is provided to remove solids and liquids which have found their way into the control circuit.

The trap should be drained daily and the element should be replaced periodically (see Section 8, "Maintenance Schedule") to reduce the probability of control malfunctions and the need to disassemble and clean control system components.

Inlet Valve (Figure 6-4) – The inlet valve is a pilot actuated valve controlled by air pressure from the subtractive pilot. As the control air pressure increases, it overcomes the force of spring "F" and closes the inlet valve enough to match air system demand. As the control air pressure decreases, the force of spring "F" opens the inlet valve to match air system demand.

It takes 5 psig of control pressure to overcome the spring force and begin to close the inlet valve. The valve closes completely at 15 psig control pressure (10 psi differential pressure from full load to full unload). In the example of Figure 3-4, the inlet valve would be fully loaded at 100 psig and would be fully unloaded at 110 psig. Between 100 psig and 110 psig, the inlet valve would modulate as necessary to match air system demand.

Spring "G" closes the valve when the compressor is stopped to prevent any backflow of air or oil.

See "Control System Operation" in this section for a description of how the inlet valve responds during operation.

Purge Air Valve – The purge air valve is a normally closed two-way air-actuated valve that admits purge air from the final discharge manifold to the compressor to counteract the oil knock that occurs in oil-flooded rotary screw type compressors when they are completely unloaded with pressure in the oil reservoir. See Figure 7-4 for a schematic diagram of the Purge Air Valve in both its modes of operation.

Shuttle Valve (Figure 8-4) – Also known as a double check valve, the shuttle valve is a device which will take two (2) supply signals and allow the one with the highest pressure to pass through. The shuttle valve is used in the Low Demand control system with reservoir blowdown to allow the control to work from both the oil reservoir and the plant air system side of check valve.

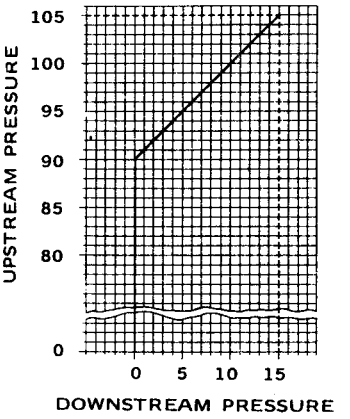

B76681

FIGURE 3-4.

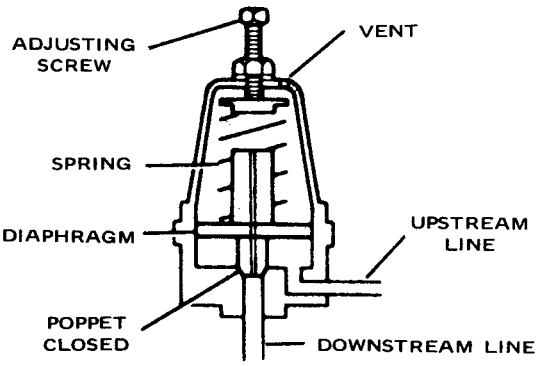

FIGURE 4-4. – SUBTRACTIVE PILOT (Closed)

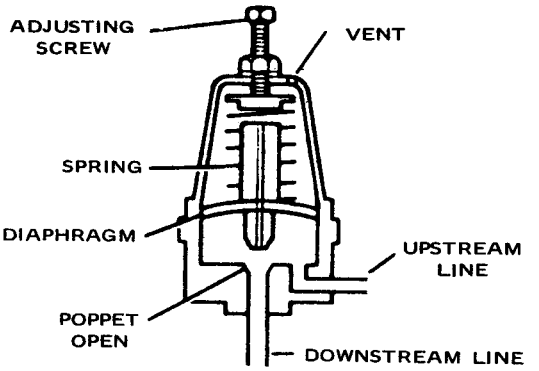

FIGURE 5-4. – SUBTRACTIVE PILOT (Opened)

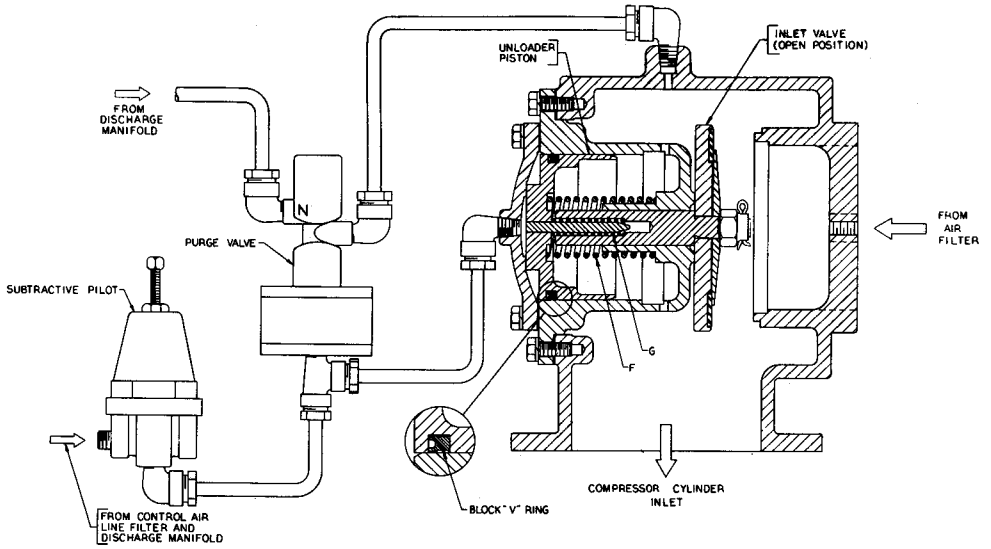

D76864

FIGURE 6-4. – INLET VALVE

Blowdown Valve (Figure 9-4) – The blowdown valve is a pilot operated two-way valve that is piped into the oil reservoir discharge manifold ahead of the check valve. When the pilot actuator is vented, the blowdown valve opens, and the reservoir blows down. When the actuator is pressurized, the valve closes and allows the reservoir to pressurize.

Low Demand 4-Way Solenoid Valve (Figure 5-1) – The low demand solenoid valve when energized passes a low pressure air signal to close the blowdown valve. When de-energized, it passes a low pressure air signal to close the compressor inlet valve and exhaust air to open the blowdown valve.

Low Demand Pressure Switch (Figure 5-1) – The low demand pressure switch de-energizes the 4-way solenoid valve to blow down the reservoir and unload the compressor when:

1. The selector switch is in the LDM position, and,

2. The discharge pressure reaches the upper set point of the pressure switch.

Reservoir/Low Oil Pressure Switch (Figure 5-1) – This switch performs the function of both a reservoir pressure switch and a low oil pressure switch.

As a reservoir pressure switch it will prevent motor damage if an attempt to start the motor is made before the reservoir is completely blown down. The switch will not allow the motor to start until the oil (reservoir) pressure is below the low limit of the switch. The low limit is set at the factory and should be maintained at 5 psig.

As a low oil pressure switch is protects the compressor from possible damage caused by operating with low oil pressure and from lubrication failure due to an oil line restriction or sudden loss of oil pressure. The switch will stop the compressor if the oil pressure does not rise to the upper limit of the switch within 10 seconds after starting, or falls below the upper limit during operation. The upper limit is set at the factory and should be maintained at 15 psig.

If resetting is necessary:

1. Adjust the upper limit pressure to 15 psig by turning the slotted screw near the top of the switch. Clockwise movement of the screw raises the pressure; counterclockwise lowers the pressure. Note approximate pressure setting is indicated on the range scale on left face of switch.

2. Adjust the lower limit pressure to 10 psig by turning the slotted screw (differential) near the bottom of the switch until the cam-shaped calibrated dial under the pressure setting screw indicates about one-fourth (1/4) of full scale reading from lowest setting. Clockwise movement of the screw reduces the differential; counterclockwise increases differential. Note differential range (3-18 psi) is indicated by marks on the cam-shaped dial.

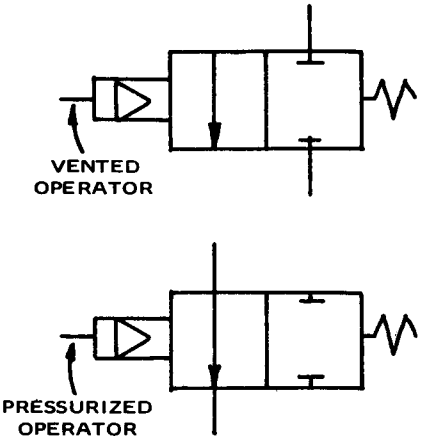

FIGURE 7-4. – PURGE AIR VALVE

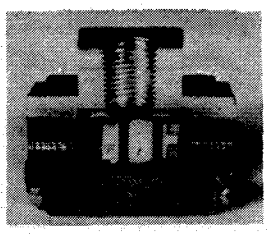

FIGURE 8-4. – SHUTTLE VALVE

If the compressor is shut down by the reservoir/low oil pressure switch, the selector switch must be turned to the "OFF/RESET" position before the compressor can be restarted.

CAUTION

DO NOT CONTINUE TO RESTART THE UNIT IF THE SAME MALFUNCTION OCCURS WITHIN A SHORT PERIOD OF TIME. FIND AND CORRECT THE TROUBLE BEFORE RESUMING OPERATION.

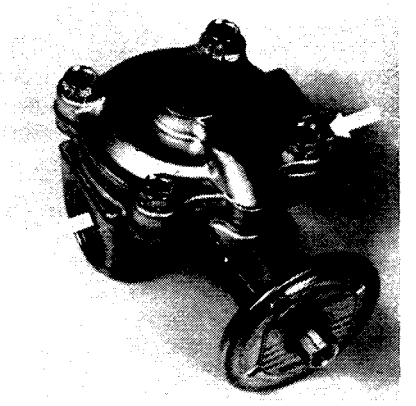

FIGURE 9-4. – BLOWDOWN VALVE

Pressure Regulator (Figure 5-1) – The pressure regulator senses and maintains a constant downstream pressure. The pressure regulator is used to supply a low control pressure to prevent damage to the inlet valve from "slamming". The regulator must be set at 25-30 psig; the gauge on the regulator reads this control pressure from the valve.

Minimum Discharge Pressure Valve (Figures 5-1 and 10-4) – An internal spring-loaded minimum pressure valve is used in the final discharge line to provide a positive pressure on the oil system of compressor even when the air service valve is fully open.

A valve incorporates an orifice which, when air is flowing through it, maintains approximately 65 psig in the oil reservoir. A spring-loaded piston valve senses air pressure on the upstream (oil reservoir side) of the valve. When the system pressure rises above 65 psig, the spring is overridden and the valve opens to full porting.

The valve does not require maintenance or adjustment. If the valve fails to function, check the valve stem O-ring for sealing, valve orifices for restriction, or valve and valve seat for burrs and dirt.

The valve is adjustable within a small range. It is adjusted by a screw on the side of the valve body. The minimum pressure can be adjusted as follows:

1. Start the compressor.
2. Reduce pressure downstream of minimum pressure valve to below desired minimum pressure. DO NOT REDUCE UPSTREAM PRESSURE OR ADJUST VALVE BELOW 65 PSIG.
3. Loosen locknut on adjusting screw.
4. Turn set screws in to increase, or out to decrease minimum pressure to be held.
5. Hold set screw at desired point and tighten locknut.

Check Valve (Oil Reservoir) (Figure 5-1) – A renewable seat swing type check valve in the final discharge manifold prevents backflow of air from the shop air line when the unit stops, unloads or is shut down.

STARTER/CONTROL BOX (Figure 2-1) – The following control components are located on or inside the combination starter/control box.

Hourmeter – A continuous reading (nonreset) type hourmeter displays the accumulated operating time of the unit and provides a convenient means for scheduling changes of oil and servicing of filters, separators and other devices.

Selector Switch – This four position switch is used to:

1. Start the compressor.
2. Select the operating mode.
3. Stop the compressor.
4. Reset the control circuit.

See Section 3, "Starting and Operating Procedures", for complete operating instructions.

Emergency Stop Switch – This pushbutton switch controls power to the programmed controller, and will shut the compressor down regardless of any malfunction within the programmed controller. This pushbutton may be

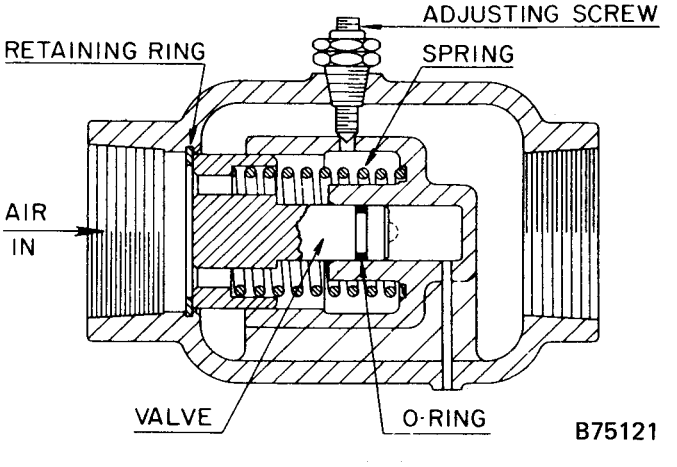

FIGURE 10-4. – MINIMUM DISCHARGE PRESSURE VALVE

used to stop the compressor at any time, but the circuit must be reset each time emergency stop switch is used.

Programmed Controller (Figures 3-1 and 11-4) — The control system utilizes a programmed controller to replace timers and relays and to provide the logic for the operation of the control system.

LED indicator lights visible through a sealed slot in the door of the starter/control box allow the operator to monitor the operation of the programmed controller and the compressor control system.

Operation Lights — The operation lights provide information on the status of the control system during normal operation.

Ready — This light indicates when the compressor is in the "Ready" or power on mode. The "Ready" light will be illuminated when power is available, the selector switch has been moved to the "OFF/RESET" position, and there are no existing monitored faults.

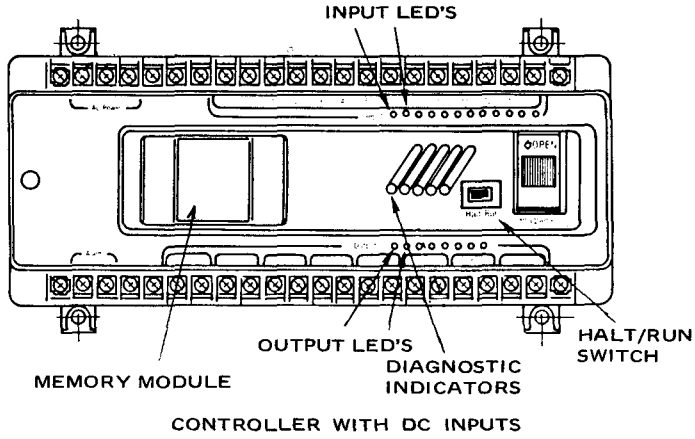

FIGURE 11-4. — PROGRAMMED CONTROLLER

Auto-Start — This light will be illuminated during normal operation whenever the selector switch is in the "Auto" position.

DANGER

WHEN THE "AUTO" LIGHT IS ILLUMINATED THE COMPRESSOR MAY AUTOMATICALLY START AT ANY TIME. DISCONNECT THE MAIN POWER SUPPLY AND RELIEVE PRESSURE IN THE RESERVOIR BEFORE WORKING INSIDE THE ENCLOSURE. FAILURE TO DISCONNECT POWER MAY RESULT IN PERSONAL INJURY.

Run — This light is illuminated whenever the compressor is running (starter is energized).

Reservoir Pressure — This light is illuminated whenever the selector switch is in the "Auto" or "LDM" mode and the reservoir is pressurized.

Shutdown Lights — Whenever the compressor is automatically shut down due to a monitored fault, the operation lights will be extinguished and one of the shutdown lights will be illuminated to indicate the cause of the shutdown. The shutdown light will remain illuminated until the control system is reset by moving the selector switch to the "OFF/RESET" position.

High Air Temperature — This light will be illuminated whenever the compressor is shut down due to high compressor discharge air temperature.

Low Oil Pressure — This light will be illuminated whenever the compressor is shut down due to low oil pressure to the compressor.

Main Motor Overload — This light will be illuminated whenever the compressor is shut down due to overload of the compressor drive motor.

Fan Motor Overload — This light will be illuminated whenever the compressor is shut down due to overload of the oil cooler fan motor on air-cooled compressors or overload of the vent fan motor on water-cooled compressors.

Programmed Controller Diagnostic Indicators (Figure 11-4) — Five LED indicator lights located on the programmed controller provide diagnostic information to aid in troubleshooting the control system.

The function of these diagnostic indicators is explained in Section 9, "Troubleshooting".

Programmed Controller Input Lights (Figure 11-4) — There are 14 LED indicator lights which indicate the status of each input. Refer to wiring diagrams in this section for information concerning the input light.

Memory Module (Figure 11-4) — The memory module contains the PROM (Programmed Read Only Memory). The memory module is programmed at the factory. The program is permanent and is not affected by power interruptions.

CAUTION

POWER MUST BE DISCONNECTED BY OPENING MAIN DISCONNECT SWITCH BEFORE REMOVING OR REPLACING MEMORY MODULE. MEMORY MODULE INSERTION OR REMOVAL WITH POWER ON CAN RESULT IN FAILURE OF THE MEMORY MODULE OR CPU.

To remove a memory module, pull the memory module straight out. To install, line up the plug on the memory module and CPU and push the memory module straight in until it clicks into place.

Programmed Controller Battery Replacement (Figure 12-4) — The battery provides power for the internal memory in the programmed controller and must be functional for the compressor to start after a power interruption. See information for "Low Battery" LED in this section.

Battery replacement should be scheduled for every two years to avoid battery failure during operation.

The battery and its connectors are special to this device — no substitutes should be attempted.

The following materials should be o.. hand before changing battery:

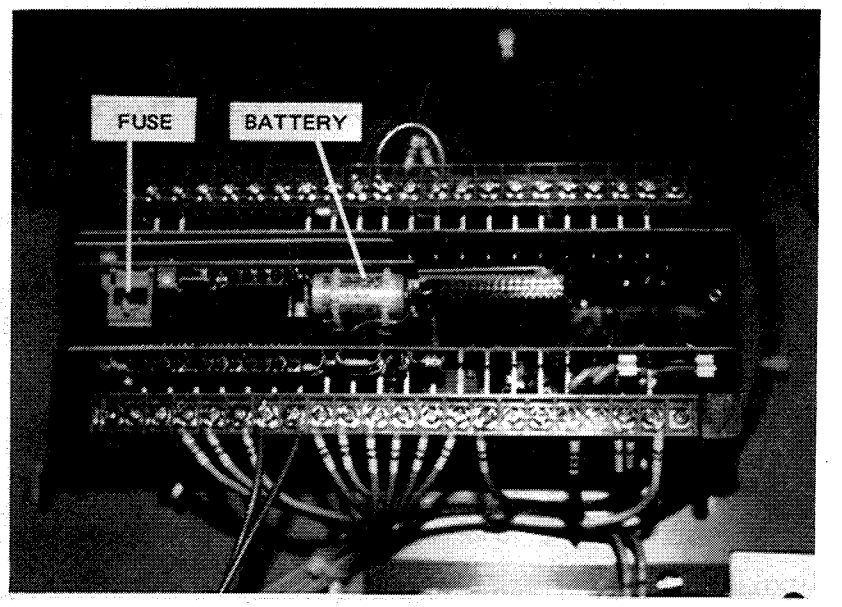

FIGURE 12-4.

a new battery.

a clean, flat, nonconductive board about 12" x 12".

WARNING

DISCONNECT POWER BY OPENING MAIN DISCONNECT SWITCH. ANY ATTEMPT TO REPLACE BATTERY WITH POWER ON COULD RESULT IN DAMAGE TO PROGRAMMED CONTROLLER OR COMPONENTS.

HANDLE INTERNAL PARTS CAREFULLY AND ONLY AS NECESSARY. THESE CONTAIN SENSITIVE PARTS AND CAN EASILY BE DAMAGED. HANDS MUST BE CLEAN TO PREVENT CONTAMINATION OF THE BOARD WITH OILS FROM HANDS.

AFTER REMOVING THE PRINTED CIRCUIT BOARD WITH THE BATTERY, IT SHOULD BE PLACED ON A NONCONDUCTIVE SURFACE TO PREVENT A POSSIBLE BATTERY SHORT CIRCUIT. DO NOT ALLOW ANY METAL OBJECT (TOOLS, JEWELRY, ETC.) TO COME INTO CONTACT WITH THE BATTERY TERMINALS.

DANGER

DO NOT DISPOSE OF BATTERIES IN A FIRE. THIS CAN RESULT IN EXPLOSION AND/OR CHEMICAL BURNS TO PERSONNEL.

DO NOT PUNCTURE CASING. THIS CAN RESULT IN CHEMICAL BURNS TO PERSONNEL.

To replace battery:

1. Turn power off.
2. Remove memory module (see "Memory Module" in this section).
3. Loosen screw on center top of cover. Remove cover by pulling top edge away from programmed controller in an arc about the bottom edge until the catch releases.
4. Grasp the printed circuit board containing the battery (short board) by its side edges and pull straight out. Place the board on a clean nonconductive surface with the battery up.
5. Remove the old battery by pulling out the battery connector and cutting the cable ties.
6. Secure the new battery to the board with the cable ties provided. Align battery and connector properly.
7. Carefully reinstall the board in the box. When seated, the front edge of the board should be flush with the other boards.
8. Reinstall the cover by engaging the bottom catch and rotating the cover closed. Tighten the screw.

9. Insert memory module.

10. Restore power and check that "Low Battery" LED is not illuminated.

Programmed Controller Fuse Replacement (Figure 12-4) – There is one fuse in the internal power supply of the programmed controller.

WARNING

USE ONLY A 3 AMP 250 VOLT FUSE. USE OF A FUSE OF A DIFFERENT RATING MAY RESULT IN DAMAGE TO EQUIPMENT.

OPEN MAIN DISCONNECT SWITCH BEFORE REPLACING FUSE. FAILURE TO DISCONNECT POWER COULD RESULT IN DAMAGE TO PROGRAMMED CONTROLLER OR COMPONENTS.

To replace fuse:

1. Follow steps 1 through 3 for battery replacement, above, to gain access to fuse.

2. Remove blown fuse. Insert new fuse.

3. Follow steps 8 through 10 for battery replacement. After completion, check that "Power" LED is illuminated.

AUXILIARY AIR RECEIVER – An auxiliary air receiver with adequate volume must be used to prevent rapid cycling of the unit. Occasionally shop air lines are such a length as to provide adequate volume, but this should be carefully checked before using the unit without an auxiliary air receiver.

CONTROL SYSTEM OPERATION – The **SELECTRA CON** control system is the optional control system for the compressor and consists of three different operating modes. The operating mode is determined by the position of the selector switch (see Section 3, "Starting and Operating Procedures").

Constant Speed (CON) – The constant speed mode is best used in applications where there are no long periods of unloaded operation.

The control system will modulate the compressor capacity to match the air system demand. As the demand for compressed air decreases, the system air pressure increases. When the air pressure increases above the setting of the subtractive pilot, the pilot passes pressure to the inlet valve piston and the inlet valve closes enough to match air system demand, see Figure 13-4.

As the demand for air increases, the air pressure drops. When the air pressure drops below the setting of the subtractive pilot, the pilot closes. When the pilot pressure to the inlet valve decreases, the inlet valve opens fully and the compressor is at full load, see Figure 14-4.

Low Demand Mode (LDM) – The low demand mode reduces power consumption by relieving pressure in the reservoir during unloaded operation.

As the air pressure increases in response to a reduction in system demand, the inlet valve will initially close as described under "Constant Speed Operation" above. As long as system demand remains above 20% capacity of the compressor the inlet valve will modulate to match capacity to system demand.

A drop in system demand below 20% of compressor capacity will cause the air pressure to exceed the upper limit of the low demand pressure switch. When this pressure is exceeded, the contacts of the low demand pressure switch will open; de-energizing the 4-way solenoid valve. In the de-energized position, the valve directs pressurized air to shuttle valve 2 and vents the pilot actuator of the blowdown valve. The blowdown valve opens, venting the pressure in the oil reservoir.

When the pressure in the oil reservoir decreases, the pressure out of the subtractive pilot also decreases. When the outlet pressure falls below the regulated air pressure from the 4-way solenoid valve, shuttle valve 2 shifts to direct regulated air pressure to the inlet valve and purge valve, maintaining unloaded operation. When the pressure in the oil reservoir drops below the plant air pressure, the discharge check valve prevents any reverse flow of air to the reservoir. At the same time, shuttle valve 1 shifts to use the higher pressure air from the service line to keep the control system pressurized, see Figure 15-4.

When the low demand pressure switch de-energizes and the reservoir blows down, a 15 minute "timer" in the programmed controller is started. During this 15 minute period, the compressor will load and unload in the constant speed mode as required. The programmed controller will prevent the low demand pressure switch from de-energizing before the 15 minute interval is completed, however. As a result, the compressor will not blow down more often than once every 15 minutes.

The 15 minute minimum cycle eliminates the problems of oil foaming and carryover which can occur if the oil reservoir on an oil-flooded compressor is blown down too often.

Automatic Start/Timed Stop (AUTO) – The automatic start/timed stop mode is best used in applications where there are long periods of no demand. Power consumption is minimized by stopping the compressor during extended periods of unloaded operation.

Operation is identical to the operation of the low demand mode system except that when the pressure switch is de-energized and reservoir is blown down, an additional "timer" is started. If system air pressure does not drop to the low setting of the pressure switch within the programmed time period, the compressor will stop. The AUTO/START light will remain lit as long as the selector switch is in the AUTO position. When system air pressure drops to the low setting of the pressure switch, the compressor will start, and the load-unloaded-stop cycle will repeat.

The time interval is field-selectable at either 10 minutes or 20 minutes. Selection is accomplished by the position of a jumper wire on the programmed controller. See wiring diagrams in this section for details. All compressors are assembled at the factory with a 10 minute time interval.

In applications where the demand for air changes frequently, the 20 minute interval is the better choice because it minimizes problems associated with excessive motor starting. If the demand for air changes less frequently, the 10 minute interval is the better choice.

OPERATING AIR PRESSURE ADJUSTMENT – Start the compressor in the constant speed mode (CON). Close the air service line valve, allow the compressor to build to full pressure and unload and proceed as follows:

Inlet Valve Subtractive Pilot Setting – Full unload pressure should be 10 psi above operating pressure but should not exceed 10 psi above compressor rating.

Pressure Too High:

1. Loosen the inlet valve subtractive pilot locknut. Back the adjusting screw out about one turn.
2. Open the air service line valve and bleed air from the unit so that the compressor loads again. Close the valve and allow the compressor to unload.
3. Repeat steps 1 and 2 until the proper pressure is obtained. Tighten the locknut.

Pressure Too Low:

1. Loosen the inlet valve subtractive pilot locknut.
2. Turn the adjusting screw in until the proper pressure is obtained.
3. Tighten the locknut.

Low Demand Pressure Switch Unload Setting – The low demand pressure switch should be adjusted to blow down the oil reservoir 2-4 psi below the full unload pressure.

1. With the compressor running in the constant speed (CON) mode, close the service valve and note the full unload pressure.
2. Turn the upper adjusting screw on the low demand mode pressure switch until the pointer on the left edge indicates the pressure that is 2-4 psi lower than the full unload pressure.
3. Adjust service valve until unit is operating at full load set point.
4. Turn low demand mode switch ON. Close service valve. Note the air pressure when unit blows down. If it is not the pressure desired, repeat steps 2, 3 and 4 until proper unload pressure is obtained.

Low Demand Pressure Switch Load Setting – For best operation the low demand pressure switch should be adjusted so that the compressor load point is approximately 10 psig below the blowdown pressure.

1. With the compressor running in the low demand mode (LDM) and unloaded, set the lower (differential) screw on the low demand pressure switch at the desired differential pressure (10 psi).
2. Slowly open the service line valve and note the pressure at which the compressor loads.
3. Repeat steps 1 and 2 until the desired load pressure is obtained.

CAUTION

DO NOT ADJUST THE FULL UNLOADED AIR PRESSURE TO MORE THAN 10 PSIG HIGHER THAN THE MAXIMUM STAMPED ON THE UNIT NAMEPLATE.

MINIMUM OPERATING PRESSURE IS 65 PSIG.

Electrical Wiring – Shown at the end of this section are general wiring diagrams. See the wiring diagram supplied with the unit for exact connections.

VIBRATION SWITCH (Optional Equipment) – The optional vibration shutdown switch, mounted on the compressor coupling cover, detects an increase in vibration that could be an indication of impending damage to the unit. The switch actuates when the selected level of vibration is exceeded.

The switch MUST BE ADJUSTED when the unit is first installed. Refer to switch manufacturer's instruction manual for complete details.

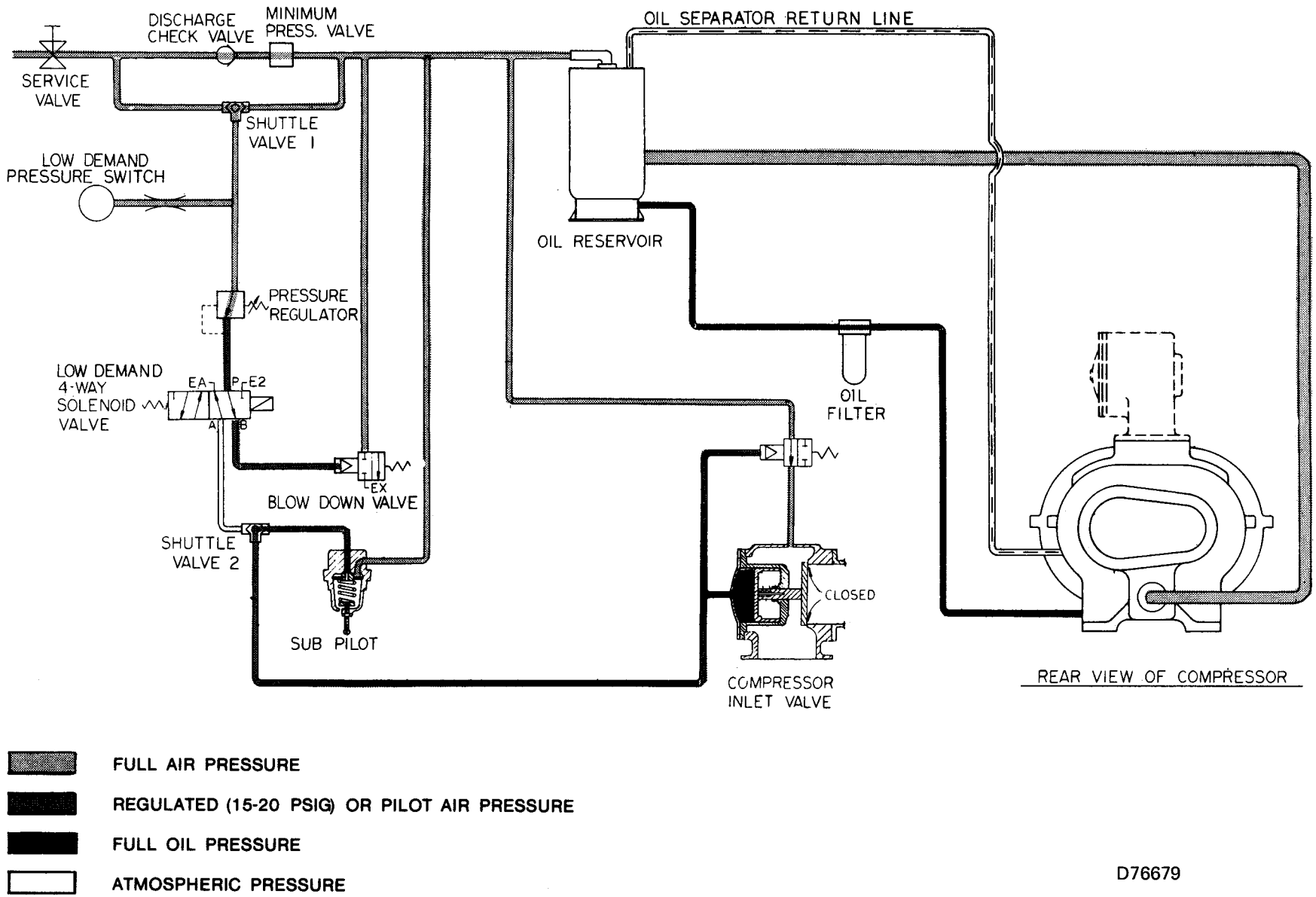

FIGURE 13-4 – CONTROL SCHEMATIC
COMPRESSOR UNLOADED – CONSTANT SPEED MODE

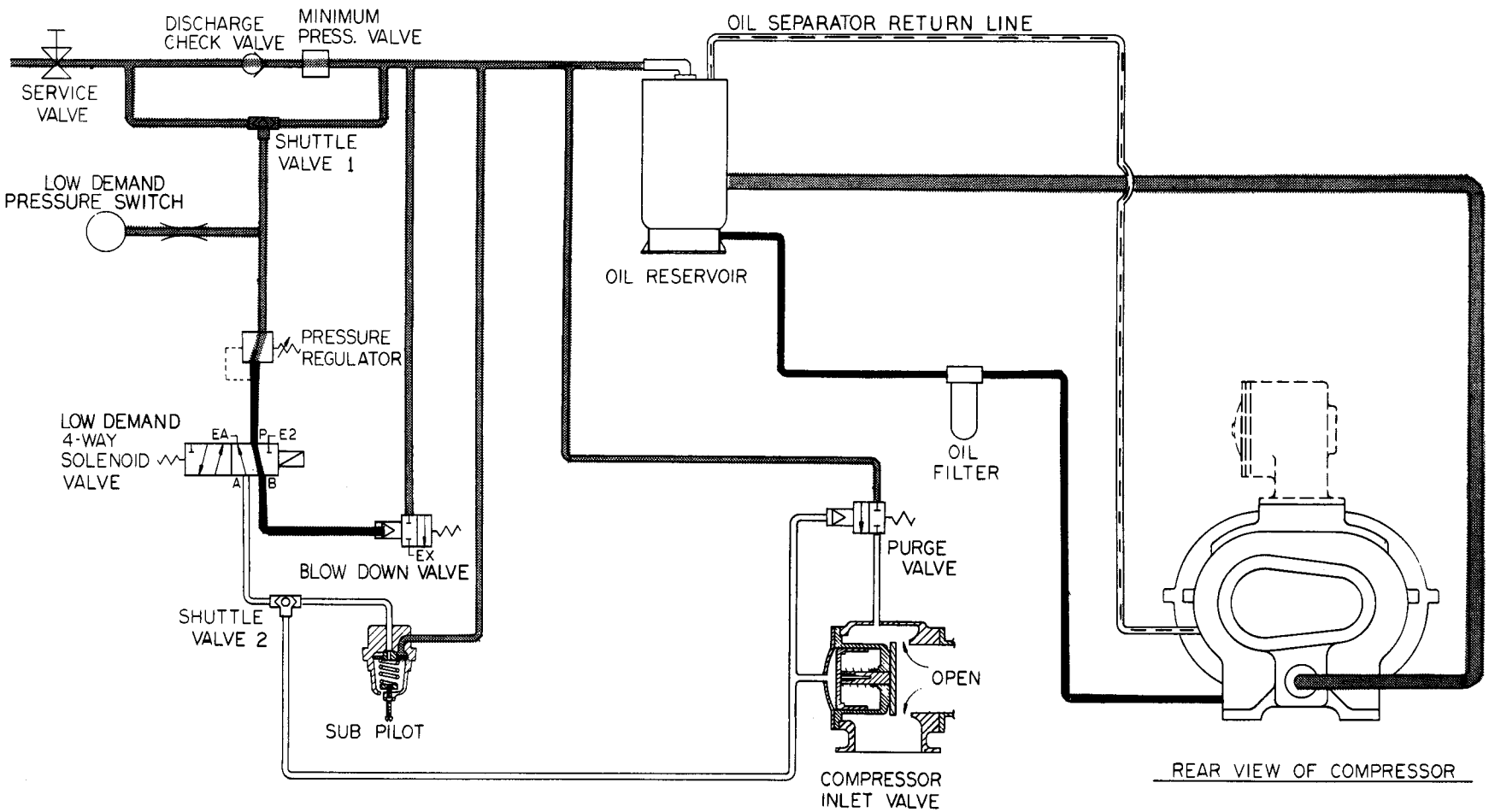

FULL AIR PRESSURE

REGULATED (15-20 PSIG) AIR PRESSURE

FULL OIL PRESSURE

ATMOSPHERIC PRESSURE

D76677X

FIGURE 14-4 – CONTROL SCHEMATIC
COMPRESSOR AT FULL LOAD – CONSTANT SPEED MODE

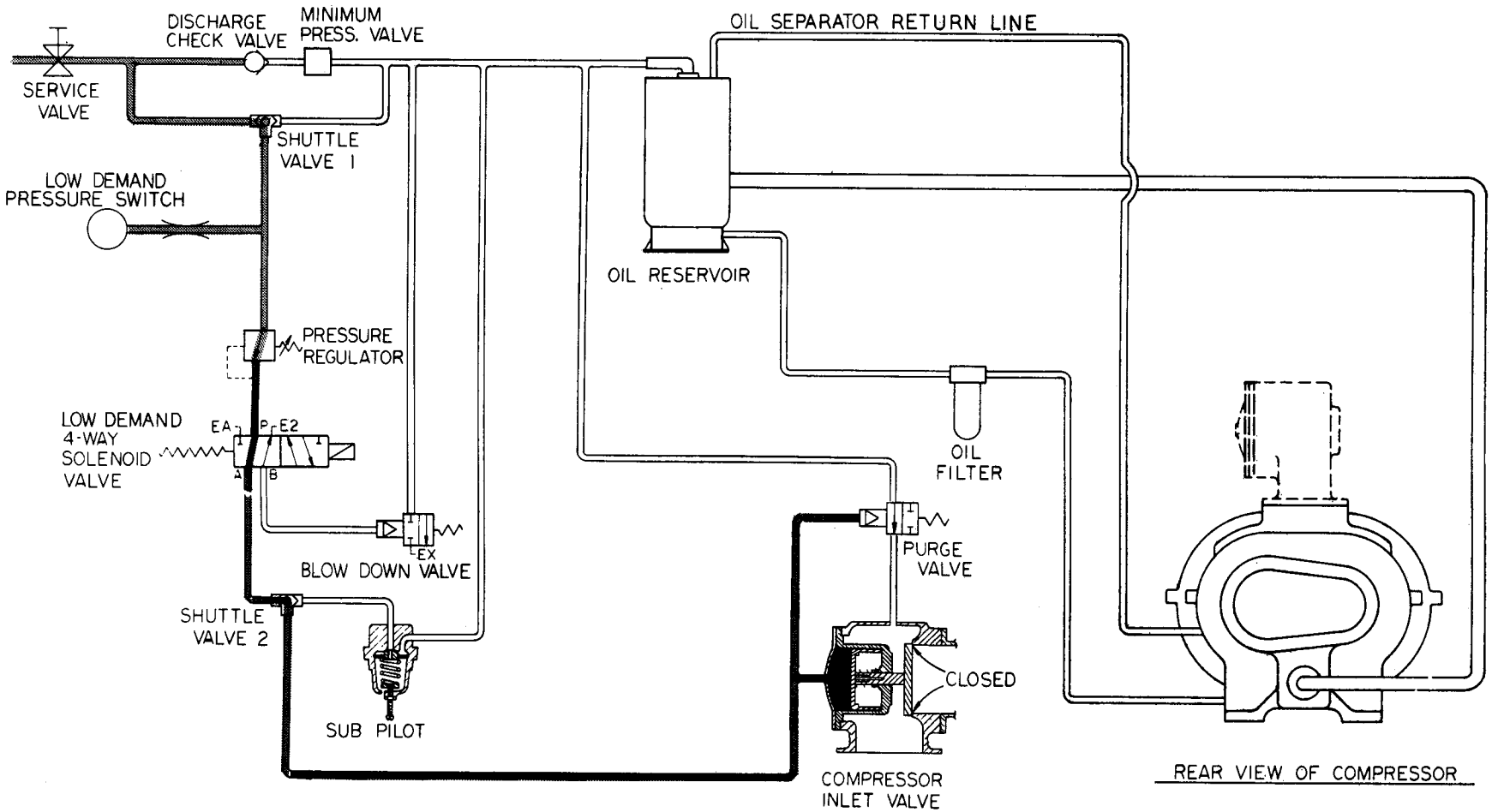

FULL AIR PRESSURE

REGULATED (15-20 PSIG) OR CONTROL AIR PRESSURE

ATMOSPHERIC PRESSURE

D76678

FIGURE 15-4 – CONTROL SCHEMATIC
COMPRESSOR UNLOADED – LOW DEMAND MODE

NOTES:

(1) CLASS "T-TRON" 600V FUSES ALL APPLICATIONS-SIZED FOR FAN MOTOR AMPS.

(2) CLASS "CC" FUSES SIZED FOR TRANSFORMER PRIMARY VOLTAGE.

(3) SEE SKETCH FOR TRANSFORMER PRIMARY CONNECTIONS.

H.D.T.S. CONDITION CHART				
CONDITION	POWER ON	"A"	"B"	"C"
POWER OFF	OFF	OFF	OFF	OFF
NORMAL TEMP.	ON	RED	RED	OFF
COMP. HIGH TEMP.	ON	OFF	RED	OFF
SEP. HIGH TEMP.	ON	RED	OFF	OFF
COMP PROBE OPEN	ON	OFF	RED	GREEN
SEP. PROBE OPEN	ON	RED	OFF	GREEN
COMP PROBE SHORTED	ON	OFF	RED	RED
SEP PROBE SHORTED	ON	RED	OFF	RED
COMP PROBE SHORTED/ SEP PROBE SHORTED	ON	OFF	OFF	ORANGE
COMP PROBE OPEN/ SEP PROBE SHORTED	ON	OFF	OFF	ORANGE

WIRE COLORS
Y - YELLOW-SEPARATE VOLTAGE
R - RED-AC CONTROL
W - WHITE-AC CONTROL NEUTRAL
B - BLACK-AC POWER
BL - BLUE-DC CONTROL
G - GROUND

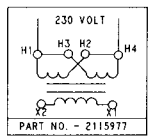

PART NO. - 2115977

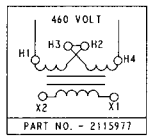

PART NO. - 2115977

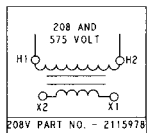

208V PART NO. - 2115978
575V PART NO. - 2115979

(4) A.P.S. MUST BE SET 4-5 PSI BELOW THE INTAKE PNEUMATIC PILOT'S STANDARD SETTING.

PILOT SETTING	APS SETTING	T.V. PILOT
110 PSI	95-105 PSI	100 PSI
135 PSI	120-130 PSI	125 PSI
160 PSI	145-155 PSI	150 PSI

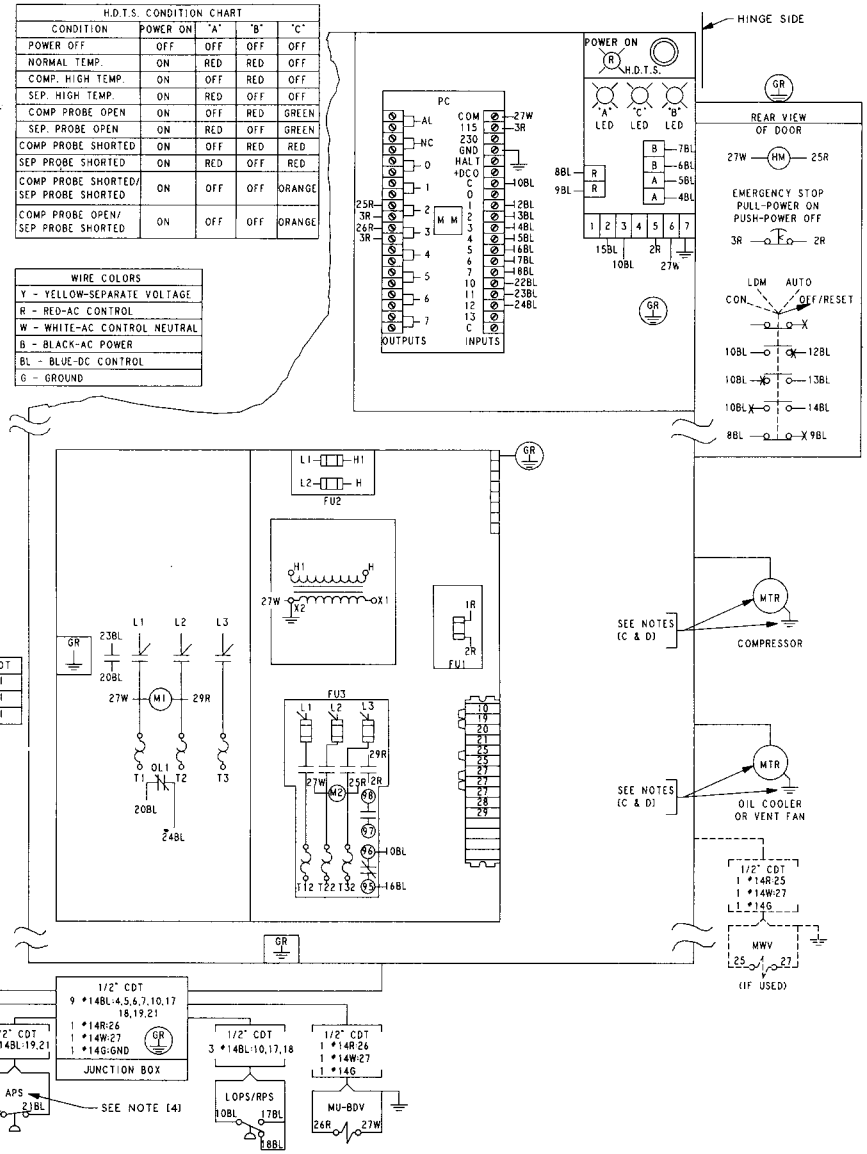

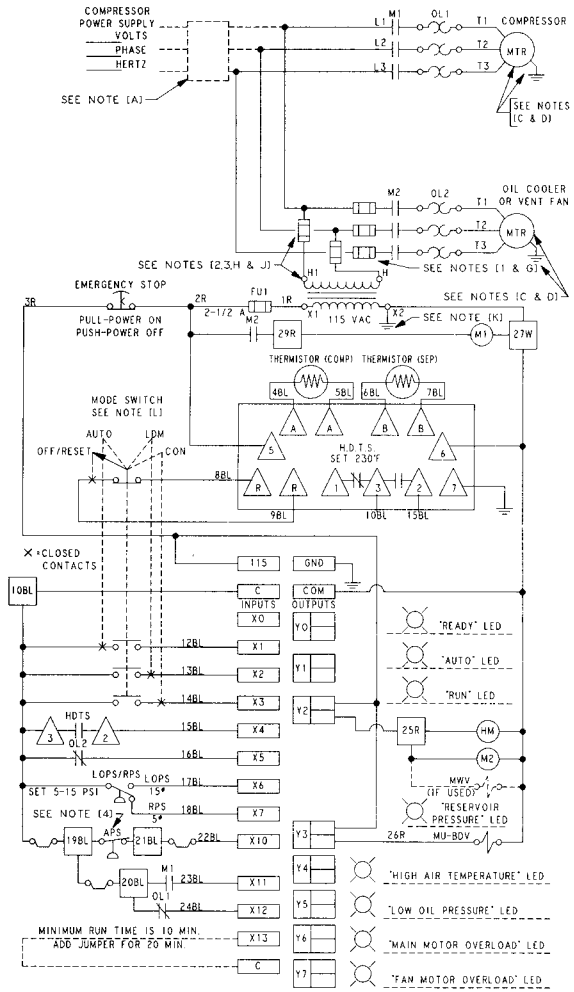

212ECM543

FIGURE 16-4. – WIRING DIAGRAM
SELECTRA CON – AIR COOLED & WATER COOLED WITH VENT FAN

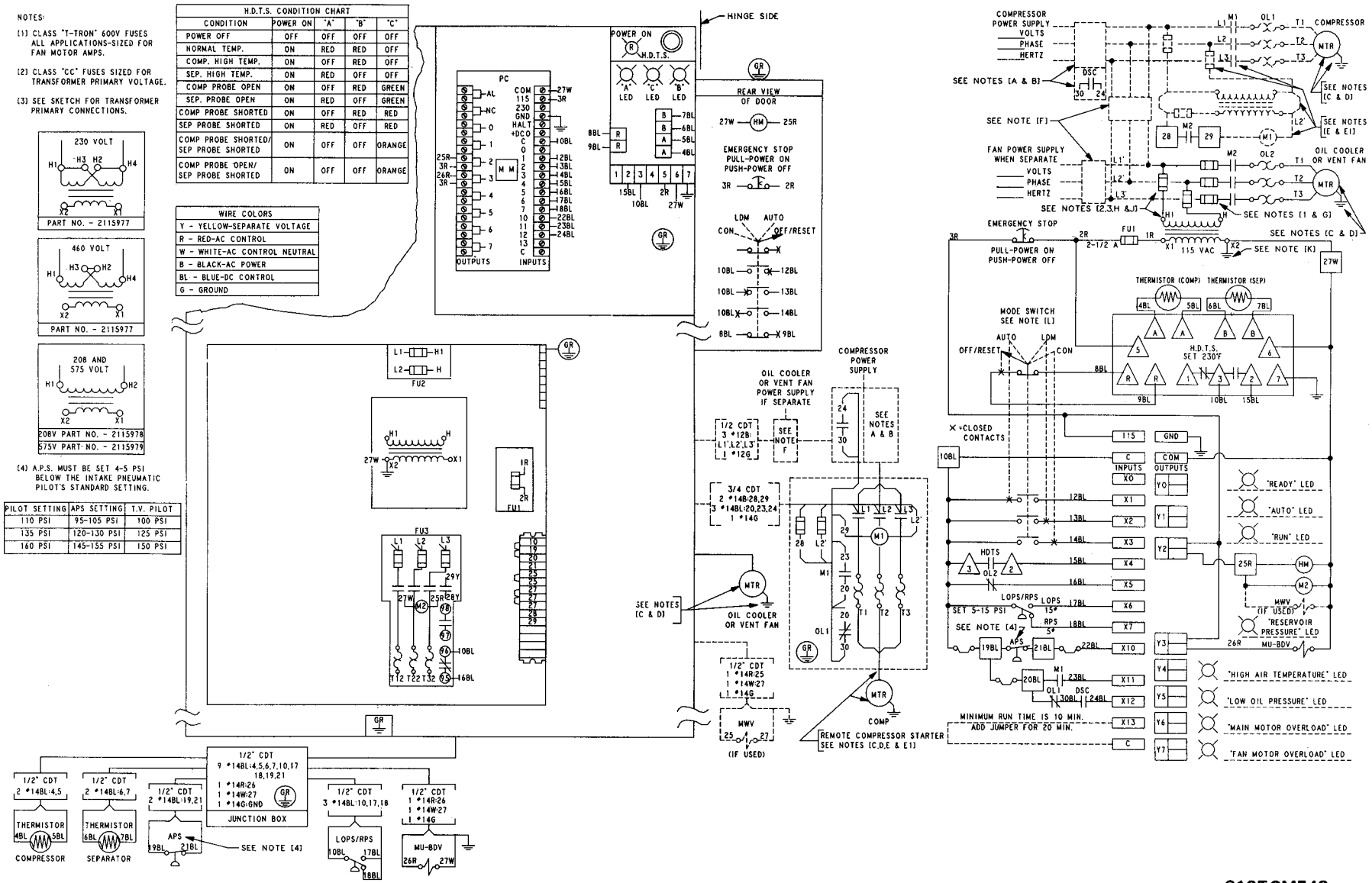

FIGURE 17-4. – WIRING DIAGRAM
SELECTRA CON – AIR COOLED & WATER COOLED WITH VENT FAN & REMOTE COMPRESSOR STARTER

NOTES FOR WIRING DIAGRAMS

(Refer to Figures 16-4 & 17-4)

All notes are not applicable to all wiring diagrams – read carefully and completely for wiring instructions.

All equipment must be connected and phased exactly as shown. All piping, wiring and other equipment not specified on the order is to be supplied by other than Gardner-Denver/Industrial Machinery.

"A" – Compressor power supply disconnecting means – fused switch or circuit breaker (not furnished as a standard item – if ordered, it must be remote mounted and wired by customer.

"B" – When the control circuit voltage is from a separate power (voltage) source and is not controlled by the motor power supply disconnecting means, a disconnect switch (DS) interlock (not furnished) shall be mounted immediately adjacent to the motor power supply disconnecting means and wired by the customer as shown in the schematic wiring diagram and per the data shown for that starter and its disconnecting means.

This interlocking device (DS) may be an auxiliary (AUX) or electrical interlock (E.I.) contact operated by the handle of the motor power supply disconnecting means.

When this disconnect switch (DS) interlock is a separate device, it shall be used to turn the control circuit "OFF" before operating the motor power supply disconnecting means. See Article 430-74 of the National Electrical Code.

"C" – Since most AC motors are wound for dual voltage, be certain leads are connected per the motor nameplate for the correct voltage.

"D" – Equipment must be grounded in accordance with Table 250-95 of the National Electrical Code.

"E" – Motor control circuits must be fused in accordance with article 430-72 of the National Electrical Code. Control circuits shall have short circuit protection (fuses, etc.) in all instances because the control circuit wiring leaves the starter enclosure to go to the external devices.

"E1" – The compressor motor starter coil voltage is the same as the motor voltage; i.e., unless the starter is ordered with its own fused control transformer. The relay contact from the compressor control panel to the remote mounted starter circuit is rated 600 volts.

Remote mounted magnetic compressor starter control circuits are to be connected for TWO (2) WIRE control.

The remote compressor starter control wiring shall be interlocked with the rest of the control wiring as shown in the schematic wiring diagram and per the wiring data shown for the remote starter. The internal wiring shown is typical only. For exact wiring, see diagram on inside of starter or diagram supplied with starter.

NOTE:
THE COMPRESSOR STARTER HOLDING (AUX.) CONTACT AND OVERLOAD RELAY CONTROL CIRCUIT CONTACT MUST BE ISOLATED FROM THE STARTER CONTROL CIRCUIT AS SHOWN; I.E., REMOVE ALL THE STARTER CONTROL CIRCUIT WIRING FROM THESE TERMINALS BEFORE CONNECTING THE WIRES FROM THE COMPRESSOR CONTROLLER.

⚠ WARNING

FAILURE TO REMOVE THE LINE VOLTAGE WIRING FROM THESE CONTACTS WILL DAMAGE COMPONENTS IN THE COMPRESSOR CONTROLLER.

The PC compressor controller will not operate if the compressor starter holding (AUX) contact and overload relay control circuit contact are not wired as shown in the wiring diagram. The PC "Ready" LED will flicker on power up if the holding contact is bypassed (jumpered) or the overload contact is not wired as shown.

All reduced voltage (current) starters are remote mounted and wired by the customer. See reduced voltage starter note on page 19, this section.

"F" – Oil cooler or vent fan power supply disconnecting means – fused switch or circuit breaker. NOT FURNISHED – and is remote mounted and wired by the customer.

"G" – Class "T-TRON" 600 volt fuses are used for short circuit protection for the oil cooler and vent fan motors.

Voltage	Vent Fan Motor		Oil Cooler Motor	
200 V	24CA2476	(JJS-6)	24CA2478	(JJS-30)
230 V	24CA2476	(JJS-6)	24CA2478	(JJS-30)
460 V	24CA2475	(JJS-3)	24CA2477	(JJS-15)
575 V	24CA2475	(JJS-3)	24CA2477	(JJS-15)

Note JJS fuses are BUSS or equal.

"H" – Class "CC" 600 volt fuses are used for transformer primary short circuit protection. Fuses are sized for a 250 VA transformer.

Voltage	
200 V	24CA617 (Buss KTKR6 or equal)
230 V	24CA617 (Buss KTKR6 or equal)
460 V	24CA276 (Buss KTKR3 or equal)
575 V	24CA276 (Buss KTKR3 or equal)

"J" – Control transformers are sized for the components shown in the schematic wiring diagram on 115 volts and not for any remote mounted compressor starter controls. Transformer part number is shown on the wiring diagrams.

"K" – Control circuit ground. A green ground wire is connected from the terminal shown on the wiring diagram to the control panel.

"L" – Mode Switch – The mode switch is a four position selector switch. They are:

OFF/RESET: The switch must be turned to this position after each and every type of power interruption to PC and/or safety device shutdown. It should also be used with all normal shutdowns.

AUTO: The compressor runs auto-start/timed stop in this mode. The standard timed-stop time is 10 minutes. An alternate timed-stop time is 20 minutes. This alternate time is obtained by adding a "C" to "X13" input jumper on the PC. These timed stop timers are not field adjustable. A different memory module (MM) is required if different time settings are required. When the timed-stop timer is timing, the compressor is operating with the reservoir blown down (low unloaded HP).

NOTE:
IF THE COMPRESSOR LOADS UP WHILE OPERATING WITH RESERVOIR BLOWN DOWN, A 15 MINUTE RESERVOIR PRESSURIZED TIMER IS ACTIVATED. WHEN THIS 15 MINUTE TIMER TIMES OUT AND THE A.P.S. SENSES NO AIR DEMAND (CONTACT OPENS), THE RESERVOIR IS ALLOWED TO BLOW DOWN AGAIN. AT THE END OF THE TIMED-STOP RUN UNLOADED TIME, THE COMPRESSOR STOPS. THE COMPRESSOR WILL START AGAIN THE NEXT TIME THE A.P.S. SENSES AN AIR DEMAND (CONTACT CLOSES).

LDM: The compressor runs constand speed in this "Low Demand Mode". A 15 minute minimum "Reservoir Pressurized" timer is used in conjunction with the A.P.S. This is to prevent too frequent reservoir blowdowns which in turn reduces oil carry-over. When the compressor is operating with the reservoir blown down, its brake horsepower (BHP) is at its minimum (Low Unloaded HP).

After a power turn on and a LDM start, the compressor will blow down immediately the first time the A.P.S. opens (no air demand). Thereafter the reservoir will not blow down until the reservoir pressure timer has timed out and the A.P.S. senses no air demand (contact opens). The compressor will run constant speed until the "Mode Switch" is turned to "AUTO" or "OFF".

CON: The compressor runs constant speed and is controlled by its subtractive pilot in this mode. The reservoir is pressurized continuously.

A.P.S. – 88A294 – PC compressor controller only. Set and reset per Note 4 on wiring diagram. The air pressure switch is functional only in the "AUTO" (Auto-Start/Timed-Stop) and "LDM" (Low Demand Mode) modes of operation.

Battery, PC – See "Programmed Controller Battery Replacement" on page 7, this section.

B.D.V. – 91B70 – Blowdown Solenoid Valve – 110/120 V – 50/60 Hz – Two-way normally open (2 W.N.O.). This valve is used on constant speed pilot only compressor controllers. 1/4" NPT.

C.R. – Control Relay – 24CA2537 – 110/120 V – 50/60 Hz coil – 600 volt contacts.

D.S.C. — Disconnect Switch Interlock — Compressor.

Emergency Stop — Pull for "Power On" and push for "Power Off".

NOTE:
THIS SWITCH DOES NOT TURN THE H.D.T.S. OFF. THIS PERMITS THE H.D.T.S. DIAGNOSTIC LED'S TO BE READ IF THIS "ES" BUTTON IS PRESSED AFTER A SAFETY DEVICE SHUTDOWN.

FU — Fuse — Transformer — 24CA158 — 2-1/4 amp — 250 volt Buss FRN(R) 2-1/4 or equal.

NOTE:
SEE NOTES G AND H FOR FAN MOTOR AND TRANSFORMER PRIMARY PART NUMBERS.

PC Fuse — Not shown — See "Programmed Controller Fuse Replacement" on page 8, this section. 24CA2498 — 3 amp — 250 V glass tube — fast blow — Buss AGC3 or equal.

H.D.T.S. — High Discharge Temperature Switch — 21D80 — Set 230° F — Thermistor Probes (2) 21D81 (compressor and separator).

△ — Terminals on H.D.T.S.

NOTE:
PC OUTPUT "Y4" LED IS USED TO INDICATE A H.D.T.S. OVER TEMPERATURE SHUTDOWN.

H.M. — Hourmeter — 24CA1994 — 120 V — 60 Hz (Alternate — 24CA1995 — 110 V — 50 Hz) Gasket — 24CA2087.

L.O.P.S./ R.P.S. — Low Oil Pressure/Reservoir Pressure Switch — 88H137 (set 5-15 psi).

The L.O.P.S. portion of this switch monitors the oil pressure after each start up. It also checks the oil pressure in the "AUTO" and "LDM" modes each time the A.P.S. loads the compressor. If oil pressure is not established (15 psi) within 10 seconds after each start or load up the compressor shuts down and the PC output "Y5" LED is used to indicate a L.O.P. shutdown.

NOTE:
IF THE L.O.P.S. PORTION OF THE SWITCH IS JUMPERED, THE COMPRESSOR WILL NOT START.

The R.P.S. portion of this switch prevents the compressor from starting until the reservoir pressure is less than 5 psi. If the R.P.S. portion of the switch is jumpered, the unit would start but will stop as soon as oil pressure is established.

M. — Motor (s) Starter Coil, Contacts, etc.

M.M. — Memory Module — UVPROM with the compressor "Sequence of Operations" stored in the memory module. This M.M. is plugged into a recessed socket on the front of the PC.

⚠ WARNING

TURN OFF ALL POWER BEFORE REMOVING AND/OR INSERTING THIS MODULE INTO ITS SOCKET. FAILURE TO DO SO MAY DESTROY THE MODULE AS WELL AS THE PC.

The unit shipped from the factory will not run without this module in place.

M.U.-B.D.V. — 91B66 — Magnetic Unloader — Blowdown Solenoid Valve — 110/120 V — 50/60 Hz. This valve is used on the PC controlled compressor only. 4 way — 1/4" NPT.

This valve is energized continuously in the "CON" mode of operation. The PC "Y3" output LED may be used to monitor the compressor load/unload operations.

This valve is used in conjunction with an air operated valve. The air valve blows the reservoir down when the compressor is unloaded (Low Unloaded HP) during "AUTO" and "LDM" modes of operation. It also blows the compressor down when the compressor shuts down. 90AR324 — 1/2" — 2-way normally open 2 W.N.O. air operated.

M.W.V. — Magnetic Water Valve — 110/120 V — 50/60 Hz — 2-way normally closed — 2 W.N.C.

WATER-COOLED OIL COOLER †		
	NEMA 1	NEMA 4
All Models	90AC118 – 3/4"	90AC103 – 3/4"

† Valves have manual override.

M.W.V.'s are also shown on the wiring diagrams for water-cooled aftercoolers (when used) and are to be sized for the aftercooler (if used).

O.L. – Overload – Heater – Contacts

PC – Programmed Controller – a 12 input/8 output controller is standard.

R.P.S. – Reservoir Pressure Switch – 88H99 – Set 5 psi on falling pressure – prevents compressor from restarting loaded.

NOTE:
THIS SWITCH IS USED ONLY ON CONSTANT SPEED PILOT COMPRESSOR CONTROLS. FOR PC COMPRESSOR CONTROLS SEE LOPS/RPS.

– Terminal Blocks (T.B.)

– Jumpers on Terminal Blocks (T.B.)

NOTE:
SOME JUMPERS MAY BE USED TO CONNECT T.B.(s) TO A DEVICE TERMINAL WITHIN THE ENCLOSURE.

– LED's on PC – The 8 output LED's are visible through the controller enclosure. The door mounted decal describes their functions. The PC inputs also have LED's (not shown on wiring diagram). These input LED's follow the switch operation that is connected to that input terminal; i.e., the LED is illuminated when the switch (device) contact is closed.

Special notes, components, part numbers and description, etc. will be shown on wiring diagrams requiring the special notes and/or components.

REDUCED VOLTAGE STARTER NOTE

1. Two extra normally open auxiliary contacts are required on most magnetic autotransformer reduced voltage starters. These contacts are required to interlock the compressor starter back to the 115 volt compressor control.

   To determine whether or not these normally open auxiliary contacts are required, look at the typical wiring diagram shown in most starter manufacturers' control handbook, digest, catalog, etc. If the typical wiring diagram shows two or more contacts paralleling the start pushbutton, then these auxiliary contacts are required.

   If the typical wiring diagram shows a control (timing) relay, with or without control transformer, then the additional contacts are not required.

   Generally these auxiliary contacts are to be ordered for the start and run contactors. If these auxiliary contacts are not ordered with the starter, then the starter manufacturers field installation kits for auxiliary contacts will have to be ordered and used. The two normally open auxiliary contacts, when required, will be supplied if Quincy orders the starters.

2. STARTING (All Types Reduced Voltage Starters) – The first point acceleration time should not be longer than 4-5 seconds. This is in order that the pressure buildup in the compressor will not bog down nor stall the motor when the starter goes from the start to the run mode.

   NOTE:
   FIRST POINT ACCELERATION TIME MAY BE LIMITED TO 2-3 SECONDS ON SOME PART WINDING MOTORS.

OIL COOLER, OIL FILTER & SEPARATOR

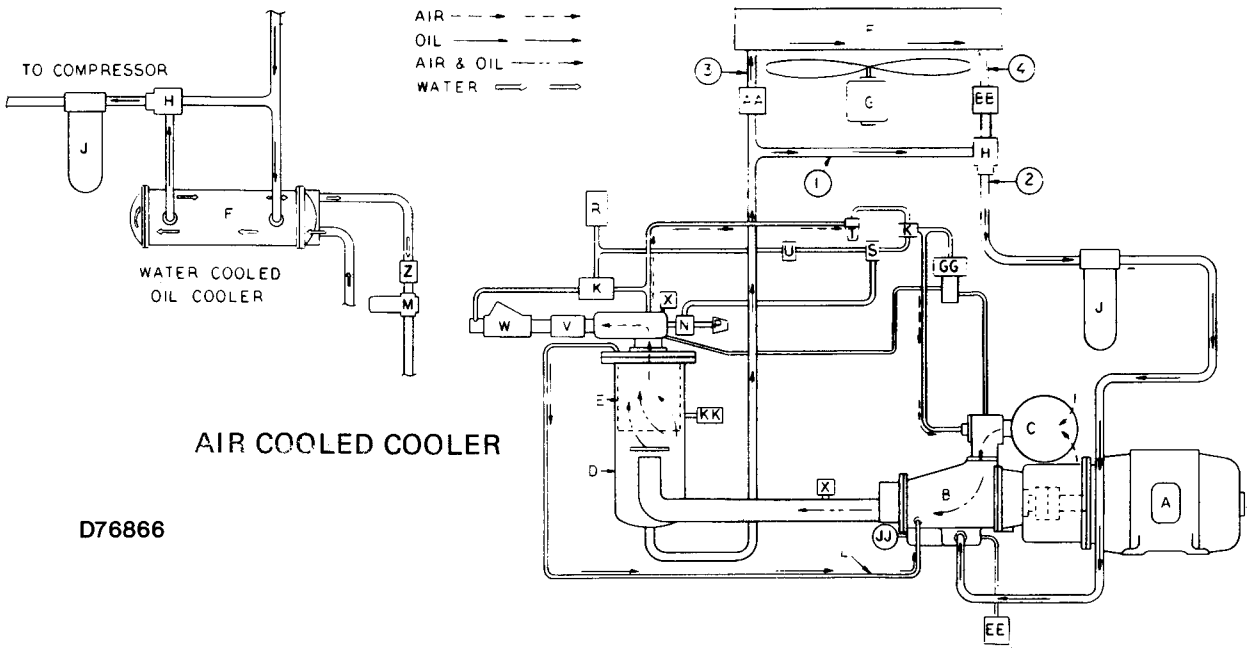

A — Motor
B — Compressor
C — Air Filter
D — Oil Reservoir
E — Oil Separator
F — Oil Cooler
G — Fan and Motor
H — Thermal Control (Thermostatic Mixing Valve
J — Oil Filter
K — Shuttle Valve — PC Control Only
L — Separator to Cylinder Oil Return Line
M — Water Flow Control Valve
N — Blowdown Valve
P — Blowdown Muffler
R — Operating Air Pressure Switch — PC Control Only
S — Magnetic Unloader — PC Control Only
T — Subtractive Pilot (Inlet Valve)
U — Pressure Regulator — PC Control Only
V — Minimum Discharge Pressure Valve
W — Discharge Check Valve
X — High Discharge Temperature Shutdown Switch
Z — Magnetic Water Shutoff Valve
AA — Oil Line Check Valve (Remote Overhead Oil Cooler Only)
BB — Oil Stop Valve (Remote Overhead Oil Cooler Only)
EE — Low Oil Pressure Switch — (PC Control Only)
GG — Purge Air Valve
KK — Reservoir Pressure Switch

FIGURE 1-5. — FLOW DIAGRAM — AIR-OIL SYSTEMS

COMPRESSOR OIL SYSTEM (Figure 1-5) cools the compressor, lubricates moving parts and seals internal clearances in the compression chamber.

The oil inlet line is connected at the bottom of the oil reservoir. Air pressure in the oil reservoir forces oil through the oil cooler, thermostatic mixing valve, oil filter and into the compressor main oil gallery.

The oil passes through internal passages for lubrication, cooling and sealing. The air-oil mixture is then discharged to the oil reservoir where a large part of the entrained oil drops out of the air stream; the air then passes through the final oil separators where most of the remaining oil is removed. The separated oil is returned to the compressor and the air passes to the final discharge line.

OIL SPECIFICATIONS — The recommended compressor lubricant is Gardner-Denver® GD800 Lubricating Coolant which can be used for year-round operation except as noted in the "High Temperature Operation" paragraph below. GD800 Lubricating Coolant is a superior petroleum base lubricant formulated and containing additives for use in Electra-Saver II® compressors.

CAUTION

MIXING OF DIFFERENT TYPES OR THE USE OF INFERIOR LUBRICANTS WILL RESULT IN THE FORMATION OF HEAVY VARNISH AND SLUDGE THROUGHOUT THE SYSTEM.

SYNTHETIC LUBRICANTS — Certain synthetic lubricants, such as synthetic hydrocarbons, diesters or polyesters offer an

extended drain interval when used in screw compressors. A superior diester lubricant is available in Gardner-Denver® GD8000 Lubricating Coolant which can extend lubricant change interval from 2 to 4 times that of GD800. A good lubricant analysis program for periodic check of lubricant quality and remaining life can maximize the change interval.

See the instructions on use of GD8000 in systems previously filled with other lubricants under "High Temperature Operation" below.

Recommended Oil	Temperature Range
Gardner-Denver GD800 Lubicating Coolant	Year-round operation at discharge temperatures to 200° F
Gardner-Denver GD8000 Lubricating Coolant	Over four (4) hours sustained discharge temperature between 200-210° F

FIGURE 2-5. – COMPRESSOR LUBRICANT

WARNING

DO NOT MIX GD800 AND GD8000 LUBRICATING COOLANTS OR OTHER PETROLEUM OR SYNTHETIC LUBRICANTS. MIXING OF LUBRICANTS MAY RESULT IN FORMATION OF VARNISH OR SLUDGE.

CAUTION

REGARDLESS OF SYNTHETIC LUBRICANT CHANGE INTERVAL USED, OIL FILTER AND OIL SEPARATOR CHANGE INTERVALS REMAIN THE SAME AS FOR GD800 – SEE MAINTENANCE SCHEDULE, SECTION 8.

HIGH TEMPERATURE OPERATION – If the discharge temperature is sustained between 200-210° F for a period of more than four (4) hours due to continuing high ambient air or water temperatures, use Gardner-Denver GD8000 Lubricating Coolant which is a superior viscosity grade diester synthetic lubricant. Short periods of up to four (4) hours of sustained discharge temperatures up to 210° F do not require a change from the recommended year-round lubricant GD800.

When installing GD8000, the original lubricant should be drained completely and the system flushed before filling with GD8000. Complete draining will involve removal of all plugs in the compressor, oil reservoir and oil lines. In some cases, it may be necessary to remove piping to insure complete draining. To insure complete removal of the original lubricant, good practice indicates draining of the original lubricant, refill with GD8000, operation for 100 hours, then draining and final refill.

WARNING

DO NOT MIX GD800 AND GD8000 LUBRICATING COOLANTS OR OTHER PETROLEUM AND SYNTHETIC LUBRICANTS. MIXING OF LUBRICANTS MAY RESULT IN FORMATION OF VARNISH OR SLUDGE.

DANGER

DO NOT SET THE HIGH DISCHARGE AIR TEMPERATURE SWITCH ABOVE 225° F TO COMPENSATE FOR HIGH TEMPERATURE OPERATION. DAMAGE TO EQUIPMENT OR PERSONAL INJURY MAY RESULT.

Use caution when selecting GD8000 lubricant as some downstream air system components such as air line lubricator bowls, gaskets and valve trim may not be compatible. Check with the component supplier for suitability of the part with diester synthetic lubricant. All materials used in Electra-Saver II compressor units are compatible with GD8000.

COLD AMBIENT OPERATION – Gardner-Denver GD800 Lubricating Coolant must be used when the ambient temperature drops to +40° F in the space enclosing the compressor unit. See "Installation for Cold Weather Operation", Section 2.

If a synthetic lubricant is used, a lighter viscosity lubricant than Gardner-Denver GD8000 is necessary in the temperature range of +10° F to -40° F. The lighter viscosity lubricant must have foam depressant, oxidation and corrosion inhibiting characteristics equal to those of GD800 and meet these minimum specifications:

Viscosity at 100° F	140 SUS
Viscosity at 210° F	44 SUS
Pour Point	-60° F

Reservoir Capacity to Centerline of RUN Range	18 U.S. Gallons
System Capacity Reservoir Plus Oil Cooler and Piping	21 U.S. Gallons
Quantity Top of ADD to Centerline of RUN Range	2 U.S. Gallons

FIGURE 3-5. – OIL SYSTEM CAPACITIES

ADDITION OF OIL BETWEEN CHANGES must be made when level of oil in the gauge is below the NORMAL range while the unit is operating. Stop unit and be sure no air pressure is in the oil reservoir. Wipe away all dirt around the oil filler plug. Remove the oil filler plug and add oil as required to return the oil level to the center of the RUN range when the unit is operating. The quantity required to raise the oil level from the top of the ADD range to the centerline of the RUN range is shown in Figure 3-5. Repeated addition of oil between oil changes may indicate excessive oil carryover and should be investigated.

OIL LEVEL GAUGE (Figure 2-1) indicates the amount of oil in the oil reservoir. When the unit is stopped the oil level will be higher in the RUN range than when operating on load. When the unit is operating the oil level should be near the center of the RUN range. In operation the oil level will fluctuate slightly as the compressor loads and unloads. Add oil only when the oil level gauge indicates in the ADD OIL range when the compressor is loaded. Drain oil only when the oil level gauge indicates EXCESS OIL when the compressor is loaded. Note that the top of the RUN range on oil level gauge decal is approximately centerline of filler elbow to prevent overfilling.

The oil level gauge is a tempered glass tube encased in a metal sleeve for maximum protection. Use caution when working near the gauge to prevent damage to the glass tube. If the glass tube should need replacement, use new gaskets in tube end caps. Lubricate the gasket faces with a thin coat of light oil, insert glass tube, install end caps finger tight, then wrench tighten 1/2-3/4 additional turn. When installing tube fittings to the gauge, hold end cap with one wrench and tighten fitting with a second wrench — use of only one wrench will overtighten end cap before fitting is tight.

MOISTURE IN THE OIL SYSTEM — In normal humidity and with normal operating temperatures and pressures, the thermal mixing valve controls the oil temperature and prevents moisture contamination of the oil. Unusual cooling of the oil reservoir, short loaded cycle in high humidity, malfunctions of the thermal valve or cooling water system may result in moisture in the oil system which is detrimental to compressor lubrication. If moisture is observed in the oil reservoir, drain the moisture and correct the condition causing the accumulation. See "Compressor Oil System Check" and "Thermal Control (Thermostic Mixing) Valve" in this section.

OIL CHANGE INTERVAL is determined by air filter maintenance, operating conditions and quality of oil. Good practice is to change oil often enough that the drained oil is relatively clean. Under good conditions Gardner-Denver® GD800 may be used up to 2000 hours of operation.

When operating conditions are severe (very dusty, high humidity or high temperature) it will be necessary to change the oil more frequently. Operating conditions and appearance of drained oil must be surveyed and the oil change intervals planned accordingly by the user. A good lubricant analysis program is helpful in planning the change interval.

DANGER

STOP UNIT AND BE SURE NO AIR PRESSURE IS IN THE OIL RESERVOIR. FAILURE TO RELEASE PRESSURE MAY RESULT IN PERSONAL INJURY OR DEATH.

DRAINING AND CLEANING OIL SYSTEM — Always drain the complete system. Draining when the oil is hot will help to prevent varnish deposits and to carry away impurities. To drain the system, use one of the following methods:

If the unit is not elevated high enough to use the oil reservoir drain valve to drain oil, a small hand, electric or air operated pump should be used to drain reservoir through the oil filler opening or from the drain valve.

If the unit is elevated so that the oil reservoir drain can be used, empty the oil reservoir through the drain valve to a suitable container or sump.

If the drained oil and/or the oil filter element are contaminated with dirt, flush the entire system: reservoir, oil cooler, mixing valve and lines. Inspect the oil separator elements for dirt accumulation; replace if necessary. If a varnish deposit exists, contact the factory for recommendations for removal of the deposit and prevention of varnish.

FILLING OIL RESERVOIR —

DANGER

STOP UNIT AND BE SURE NO AIR PRESSURE IS IN THE OIL RESERVOIR. FAILURE TO RELEASE PRESSURE MAY RESULT IN PERSONAL INJURY OR DEATH.

Wipe away all dirt before removing the oil filler plug. Refer to Figure 3-5 for the oil quantity required to fill the compressor oil system. This amount may bring the oil level into the EXCESS OIL range on the gauge. After a short time of operation, the oil level will drop into the RUN range as oil fills other parts of the system. Maintain the oil level in the RUN range. On unloaded operation and after shutdown some oil will drain back into the oil reservoir and the oil level gauge may read in EXCESS

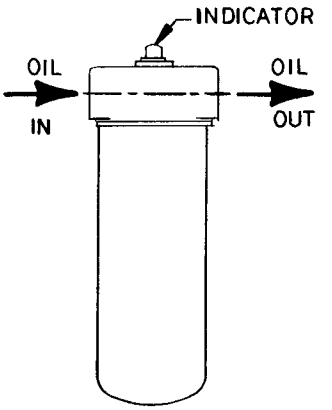

B77096

FIGURE 4-5. — OIL FILTER

OIL range. DO NOT DRAIN OIL TO CORRECT. On the next start, oil will again fill the system and the gauge will indicate operating oil level. DO NOT OVERFILL as oil carryover will result. Use only CLEAN containers and funnels so no dirt enters the reservoir. Provide for clean storage of oils. Changing oil will be of little benefit if done in a slipshod manner.

COMPRESSOR OIL FILTER (Figure 4-5) — This replaceable element filter is a vital part in maintaining a trouble-free compressor since it removes dirt and abrasives from the circulated oil. The filter is equipped with a 15 psi relief valve that opens in the event the element becomes dirty enough to block the flow of oil.

⚠ CAUTION

ELEMENT MUST BE REPLACED EVERY 1000 HOURS OR SOONER, OR WHEN THE INDICATOR ON THE FILTER IS IN THE RED RANGE. UNIT MUST BE RUNNING AND WARMED UP FOR INDICATOR TO READ ACCURATELY.

Use only the replacement element shown on filter tag or refer to parts list for the part number. Use the following procedure to replace the filter element. Do not disturb the piping.

1. Stop unit and *be sure no air pressure is in the oil reservoir.*
2. Remove the spin-on element.
3. Clean the gasket face of the filter body.
4. Coat the new element gasket with clean lubricant used in the unit.
5. Screw new element on filter body until gasket contacts body, then tighten 1/4-1/3 more turn. DO NOT OVER TIGHTEN ELEMENT.
6. Run the unit and check for leaks.

COMPRESSOR OIL COOLER — RADIATOR TYPE (Figure 1-5) — The oil cooler motor and fan is mounted on the oil cooler module; air is exhausted through the oil cooler and away from the unit. Do not obstruct air flow to and from the oil cooler. Allow two (2) feet clearance around the cooler. Keep both faces of the cooler core clean for efficient cooling of the compressor oil.

THERMAL CONTROL (THERMOSTATIC MIXING) VALVE (Figure 5-5) is installed in system as shown in Figure 1-5. This valve is used to control temperature of the oil in both air-cooled radiator and water-cooled heat exchanger type oil cooler systems. On start-up with unit cold, element is open to bypass, allowing oil to pass directly from the reservoir to compressor during warm-up. As oil warms, element gradually closes to the bypass allowing more of the oil from the cooler to mix with oil from the bypass.

After the unit is warmed up, mixing valve maintains oil injection temperature into the compressor at a minimum of 150° F. This system provides proper compressor warm-up and prevents moisture contamination of the oil.

To check element, heat in oil — it should be fully extended at 150° F. If unit shuts down due to high air discharge temperature, the cause may be that the element is stuck open to the bypass, in which case lines 1 and 2 (Figure 1-5) will be hot to touch and lines 3 and 4 much cooler. When flushing the oil system, remove mixing valve and clean all parts thoroughly.

COMPRESSOR OIL COOLER — WATER-COOLED HEAT EXCHANGER (Figure 1-5) — The heat exchanger oil cooler is a multiple pass type, with water in the tubes and oil in the shell. The oil temperature is controlled by the thermal control (thermostatic mixing) valve. The optional water control valve may be used to conserve water.

Oil cooler malfunction may be traced by checking pressure at oil inlet and outlet. At normal operating air service pressure (65 to 150 psig) with the unit warm, a pressure drop of 3 to 12 psi can be expected between the oil inlet and the oil outlet.

Water pressure drop from water inlet to outlet will vary with the inlet pressure and amount of water flowing. A normal pressure drop may

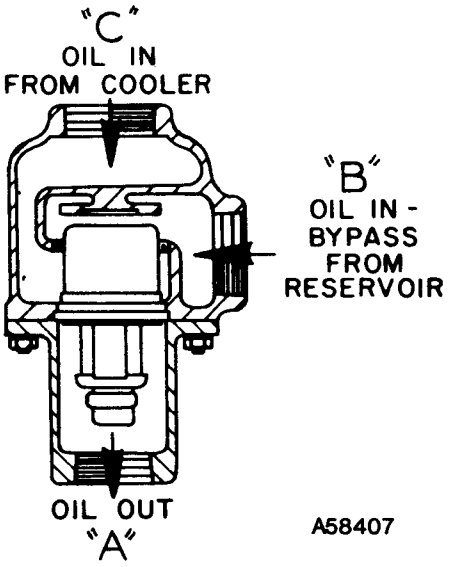

FIGURE 5-5. —
THERMOSTATIC MIXING VALVE

range from 5 to 10 psi. Any change in the pressure drop from that normally held may indicate tube leakage or fouling and should be investigated.

In many instances, the cooling water supply for the heat exchanger will contain impurities in solution and/or suspension. These substances can cause scale formation, corrosion and plugging of any water-cooled heat exchanger equipment. Disregarding the possibility that one or more of these conditions exist may result in increased maintenance and operation expense, reduced equipment life and emergency shutdown. It is stongly recommended that a reputable, local water treatment concern be engaged to establish the corrosion, scale forming and fouling tendency of the cooling water and take steps necessary to remedy the situation if a problem does exist. The need for water treatment may involve only filtration (screening) to remove debris, sand and/or salt in the cooling water supply. However, chemical treatment methods may be necessary in certain instances to inhibit corrosion and/or remove dissolved solids, to alter the water's tendency to form scale deposits, or prevent the growth of microorganisms. The normal maintenance program for the unit should also include periodic cleaning of the tubes (water side) of the heat exchanger to remove deposits which enhance fouling and corrosion.

Hex head zinc anodes are used in the return bonnet (opposite end to the water pipe connections) of heat exchangers to provide internal water system corrosion protection. These anodes should be inspected periodically and replaced when the zinc has been reduced to about 1/2 inch in length.

WATER FLOW CONTROL VALVE FOR HEAT EXCHANGER (Optional Eqipment) (Figure 6-5) — The water flow control valve is adjustable to compensate for varying water inlet temperatures and pressures and is to be mounted in the water outlet line after the oil cooler (Figure 1-5). Use the compressor discharge air temperature gauge on the instrument panel in setting the flow control valve. The compressor discharge temperature must be maintained a minimum of 10° F above the dew point temperature at the maximum anticipated ambient; refer to Figure 7-5 for the dew point temperature at the operating pressure and ambient temperature of the application.

To decrease water flow (increase compressor discharge air temperature) turn the adjusting screw from left to right, increasing spring tension. **To increase water flow** (decrease compressor discharge air temperature) turn the adjusting screw in the opposite direction. The groove at the lower edge of the adjusting screw is an index line for use with the index scale 0 to 8 in obtaining a desired setting.

These valves must be handled with care and proper tools and techniques must be used when working on the valve.

Care must be used when handling the capillary tube; a kink or break in the tubing or connections will make the valve inoperative. Never attempt to change capillary length. Excess capillary tube should be carefully coiled and placed so that damage will not occur in normal maintenance or traffic past the unit.

If the leak develops through the packing, tighten the packing gland nut firmly with a wrench to reseat the packing around the valve stem, then back off the nut until loose, and finally retighten the nut finger tight. Tightening the packing nut too tight may cause erratic operation. An occasional drop of oil on the valve stem at the packing nut will prolong packing life.

If valve malfunctions, check for bent or binding (paint or corrosion) valve stem, foreign material in valve, errosion, or thermal system (capillary) failure. If foreign material or scale is likely, the use of a strainer in the inlet water line is recommended.

WATER SHUTOFF VALVE — WATER-COOLED HEAT EXCHANGER (Optional Equipment) (Figure 1-5) — A magnetic solenoid-operated water shutoff valve rated at 150 psig water pressure should be mounted in the water outlet line after the oil cooler. The valve should be wired into the compressor control circuit so that the valve opens to allow water to flow any time the compressor is running. When compressor stops under automatic control, or is shut off manually, the valve should close, stopping water flow through the system. See Wiring Diagrams in Section 4.

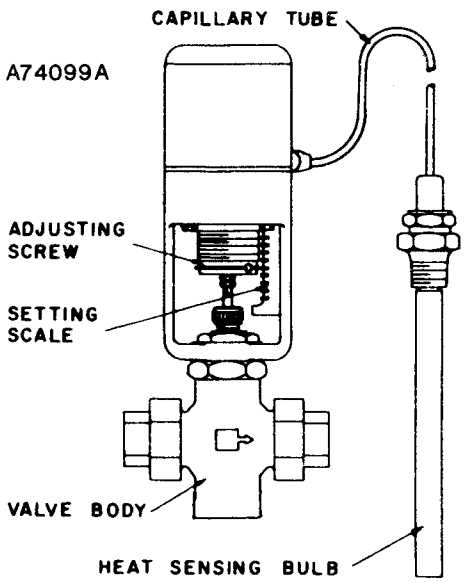

FIGURE 6-5. — WATER CONTROL VALVE

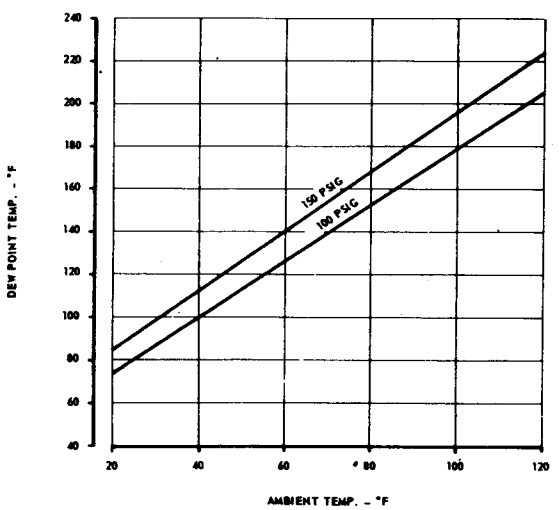

FIGURE 7-5. — DEW POINT TEMPERATURE VS. AMBIENT TEMPERATURE (100% RELATIVE HUMIDITY)

OIL RESERVOIR — The oil reservoir-separator combines two (2) functions into one vessel. The lower half is the oil reservoir, providing oil storage capacity for the system and a primary oil separation means. The upper half contains the final oil separator with the discharge manifold service line mounted on the upper flange. The reservoir also provides limited air storage for control and gauge actuation.

COMPRESSOR OIL SEPARATOR located in the upper half of the oil reservoir consists of a renewable cartridge-type separator element and provides the final removal of oil from the air stream (Figure 8-5).

Oil impinging on the outside of the separator element drains directly back into the oil reservoir by gravity. Oil collected inside the element is returned through tubing to the compressor cylinder.

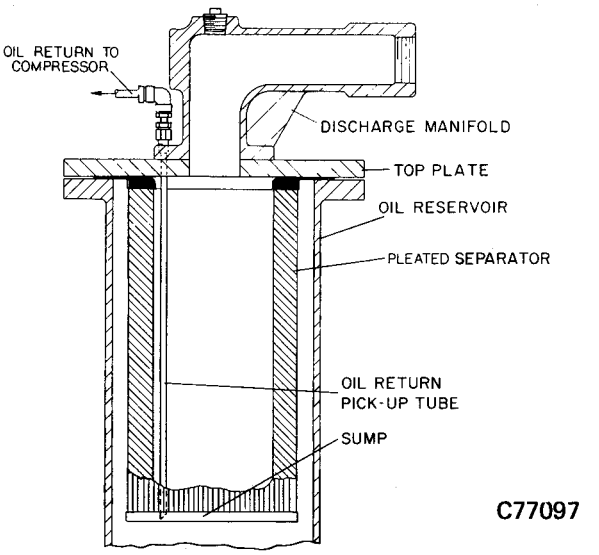

FIGURE 8-5. — OIL SEPARATOR

Oil carryover through the service lines may be caused by a faulty oil separator, faulty minimum pressure valve, overfilling of the oil reservoir, oil that foams, or oil return line malfunction. If oil carryover occurs, inspect the separator only after it is determined that the oil level is not too high, the oil is not foaming excessively, the oil return line from the discharge manifold to the compressor cylinder is not clogged or pinched off, and the return tube inside the separator is not loose or broken and is inserted to within 1/4"-1/2" of the separator bottom.

Oil carryover malfunctions of the oil separator are usually due to using elements too long, heavy dirt or varnish deposit caused by inadequate air filter service, use of improper oil or using oil too long for existing conditions. A ruptured or collapsed separator element is usually due to heavy dirt or varnish buildup in the filtering material. Excessive tilt angle of the unit will also hamper separation and cause oil carryover.

Oil separator element life cannot be predicted; it will vary greatly depending on the conditions of operation, the quality of oil used and the maintenance of the oil and air filters. The condition of the separator can be determined by pressure differential gauging or by inspection.

Pressure Differential Gauging (Figure 2-1) — The discharge air pressure gauge located on the right side of the instrument panel is also used to determine the pressure differential across the oil separator during all conditions of operation. To check pressure differential across the oil separator, be sure the unit is loaded at operating pressure. Differential cannot be measured if unit is unloaded.

1. Note discharge air pressure gauge reading.
2. Press and hold "Push to Test" pushbutton at right of pressure gauge and note new reading.
3. Subtract reading 1 from reading 2 for differential pressure.

The separator should be changed when the pressure differential reading reaches 8 psi with the unit on load at 100 psig air discharge pressure.

NOTE:
PRESSURE DIFFERENTIAL ON NEW ELEMENTS IS APPROXIMATELY 1-2 PSI. AS THE SEPARATOR RETAINS DIRT, DIFFERENTIAL WILL RISE. A SUDDEN DROP TO ZERO DIFFERENTIAL OR A SUDDEN HEAVY OIL CARRYOVER MAY INDICATE A RUPTURED SEPARATOR.

CAUTION

USING AN OIL SEPARATOR AT DIFFERENTIAL PRESSURE EXCEEDING 8 PSI RISKS INCREASING OIL CARRYOVER AND COLLAPSE OF THE SEPARATOR. NEVER USE AN OIL SEPARATOR AT A PRESSURE DIFFERENTIAL OVER 15 PSI.

Inspection — After removal of the separator use a drop light inside the element to reveal areas of heavy dirt or varnish deposits or breaks (ruptures) in the element media.

Removal Of Oil Separator For Inspection Or Replacement:

1. Disconnect oil return to compressor tubing at tube elbow near discharge manifold flange on top plate.

2. Loosen nut on fitting at manifold flange and completely withdraw the tubing through the fitting.

3. Disconnect all other tubing from discharge manifold.

4. Disconnect discharge manifold pipe union.

5. Remove screws holding the top plate to the oil reservoir. Lift top plate from the oil reservoir.

6. Lift the separator from the oil reservoir.

7. Inspect and/or replace the separator as necessary. Before installing (or reinstalling) any separator be sure gaskets bonded to the separator flanges are not damaged. Remove any gasket material adhering to top plate or reservoir flange from old separator.

8. Lower separator into oil reservoir.

9. Seat top plate to oil reservoir flange; install and tighten all cap screws.

10. Reconnect the discharge manifold pipe union and all tubing.

11. Install original oil return by slipping tube through the fitting at the discharge manifold flange until ferrule bottoms in fitting. If a new fitting and return tube is used, slip tube through fitting until it touches the bottom of the separator, then raise the tube about 1/4 inch off the bottom and tighten fitting nut securely. Connect the other end of the tube to the compressor oil return tube elbow. Do not bend tube or raise further than 1/4"-1/2" from bottom of separator.

12. Reconnect compressor oil return tube to tube elbow.

COMPRESSOR OIL SYSTEM CHECK – The following readings are based on ambient temperature of 80° F for air-cooled oil cooler and 80° F inlet water on a water-cooled oil cooler, with the system in good condition. Compressor should be at operating temperature at the time of checks. One-half hour of loaded operation is usually sufficient to reach level-out operating temperatures.

Air and Oil Discharge Temperature – 165° to 195° F – Read at thermometer on the instrument panel or check with a thermometer at the discharge housing.

Compressor Oil Inlet Temperature – 150° to 160° F – Install tee at oil filter outlet and check with thermometer.

Oil Inlet Pressure – Check at the fitting in the line near the compressor oil inlet. With air receiver pressure at 100 psi, oil inlet pressure should be 55-60 psig.

Oil Cooler Oil Pressure Differential (Air-Cooled Radiator) – Check differential across oil system by measuring oil inlet pressure as described above.

Oil Cooler Oil Pressure Differential (Water-Cooled Heat Exchanger) – 2 to 25 PSI (65 to 150 PSIG Receiver Pressure) – Check that oil inlet pressure is correct or measure differential between drains on oil cooler shell.

Oil Cooler Temperature Differential (Air-Cooled Radiator) – The oil temperature differential depends on the temperature of the air at the oil cooler fan and cleanliness of the core faces. As ambient temperatures and core restrictions increase, the oil cooler outlet temperature will increase. The oil inlet temperature is approximately the same as air discharge temperature – see gauge on instrument panel. The outlet oil temperature may be checked by installing a tee at the oil filter outlet.

Oil Cooler Temperature Differential (Water-Cooled Heat Exchanger) – The oil temperature differential depends on the inlet water temperature and the water flow rate permitted by the water flow control valve setting. The oil inlet temperature is approximately the same as the air discharge temperature – see gauge on instrument panel. The oil outlet temperature may be checked by installing a tee at the oil filter outlet.

Oil Cooler Water Pressure Differential (Water-Cooled Heat Exchanger) – The water pressure differential through the heat exchanger will depend on supply pressure, flow rate, cooler tube cleanliness and outlet pressure. The inlet and outlet water pressures may be checked at pipe fittings supplied by the customer.

AIR FILTERS

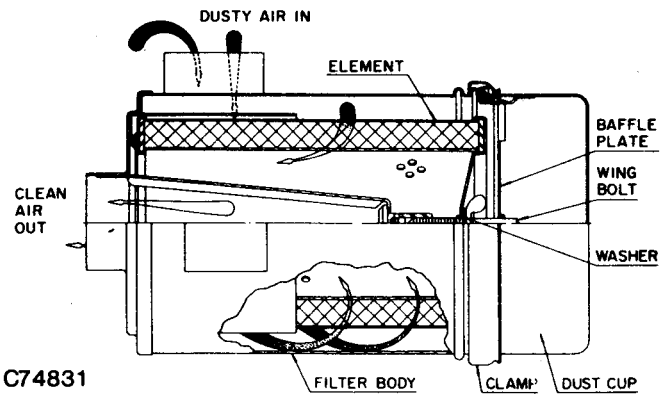

FIGURE 1-6. – HEAVY-DUTY AIR FILTER

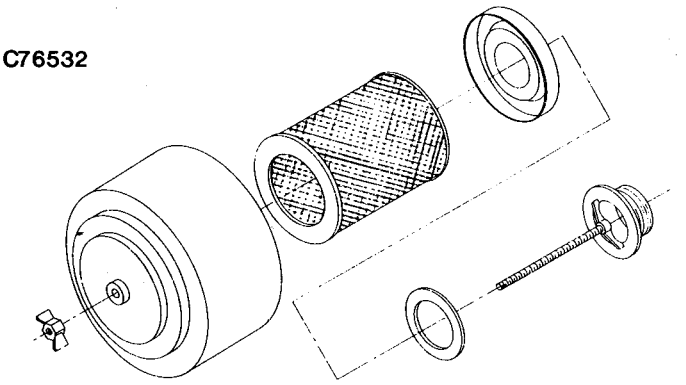

FIGURE 2-6. – DRY TYPE AIR FILTER

HEAVY-DUTY AIR FILTER (Figure 1-6) furnished as standard eqipment on units with an enclosure is a heavy-duty washable element dry type air filter. The air filter must receive proper maintenance if maximum service is to be obtained from the unit. Establishing adequate and timely filter service is MOST IMPORTANT.

Dust Cup – Service every 4 to 120 hours depending on dust conditions. To service, loosen the retaining band clamp and remove the dust cup. Do not wash the dust cup – wipe clean with a clean dry cloth. Do not bend the edge of the cup by striking on a hard surface. When installing dust cup, make sure clamp is securely tightened to prevent leakage.

Filter Element – The element should be serviced when the pressure drop through the filter reaches 20 inches of water or when service indicates time for change. Clean every 50 to 150 operating hours depending on dust conditions. Inspect every few days until experience determines the proper time for servicing. Higher than normal current use by the motor or loss of compressor delivery may indicate a need for servicing the filter element.

To service:

1. Loosen the retaining band clamp and remove the dust cup from the body of the filter.

2. Visually inspect the element in place. If cleaning is not necessary, reinstall the dust cup on the filter. If the element requires cleaning, unscrew the wing bolt and withdraw the element from the body.

3. Wash the element by soaking about 15 minutes in warm water with a mild nonsudsing detergent. Rinse the element thoroughly with clean water; a hose may be used if the water pressure does not exceed 40 psig.

4. Inspect the element for ruptures or cracks in the pleated media; replace the element if any are found. Inspect the gasket on the bottom (outlet end) of the element); replace the entire element if the gasket is damaged.

5. Allow the element to air dry COMPLETELY. Do not expose the element to heat over 150° F. Install the element in the filter body and fasten securely with the wing bolt. Reinstall the dust cup and retaining band clamp. Make sure the clamp is tightened securely to prevent leakage.

WARNING

DO NOT OIL THIS ELEMENT. DO NOT WASH IN INFLAMMABLE CLEANING FLUIDS. DO NOT USE SOLVENTS OTHER THAN WATER. IMPROPER CLEANING MAY DAMAGE ELEMENT.

CAUTION

NEVER OPERATE THE UNIT WITHOUT THE ELEMENT. NEVER USE ELEMENTS THAT ARE DAMAGED, RUPTURED OR WET. NEVER USE GASKETS THAT WON'T SEAL. KEEP SPARE ELEMENTS AND GASKETS ON HAND TO REDUCE DOWNTIME. STORE ELEMENTS IN A PROTECTED AREA FREE FROM DAMAGE, DIRT AND MOISTURE. HANDLE ALL PARTS WITH CARE.

Filter Element Life – The element should be replaced after six (6) cleanings or if:

1. Visual inspection indicates a rupture, crack or pin hole in the pleated media. Inspection should be done by placing a bright light inside the element.

2. Pressure drop through a filter with a freshly cleaned element is below three (3) inches of water with the compressor running at full load – this would indicate a rupture or crack.

Inlet Screen and Tube – Inspect the inlet screen and tube for dirt accumulation each time the filter is serviced. Clean the tube when required by ramming a clean dry cloth through the tube. Wipe the inside of the filter body to remove any dirt falling from the inlet tube before reinstalling the element.

AIR FILTER (Figure 2-6) furnished as standard equipment on units without an enclosure is a washable element dry type filter. The air filter must receive proper maintenance if maximum service is to be obtained from the unit. Establishing adequate and timely filter service is MOST IMPORTANT. When the outside surface of the element appears to be evenly coated with dirt, it should be cleaned as follows:

1. Remove the wing bolt, lift off the hood and the filter element.

2. Vibrate or blow heavy dirt accumulations from the element. Direct air blast at slight inward angle and parallel to the element pleats; do not point directly at the element.

3. If required, wash element with a nonsudsing household detergent and water; rinse with clear water. Allow to dry before reinstalling.

WARNING

DO NOT OIL THIS ELEMENT. DO NOT WASH IN INFLAMMABLE CLEANING FLUIDS. DO NOT USE SOLVENTS OTHER THAN WATER. IMPROPER CLEANING MAY DAMAGE ELEMENT.

Replace the filter element with genuine replacement parts whenever needed. Good judgment should be used in establishing the replacement interval. Do not attempt to overextend the element life; the small savings involved do not justify the risk.

CAUTION

NEVER OPERATE THE UNIT WITHOUT THE ELEMENT. NEVER USE ELEMENTS THAT ARE DAMAGED, RUPTURED OR WET. NEVER USE GASKETS THAT WON'T SEAL. KEEP SPARE ELEMENTS AND GASKETS ON HAND TO REDUCE DOWNTIME. STORE ELEMENTS IN A PROTECTED AREA FREE FROM DAMAGE, DIRT AND MOISTURE. HANDLE ALL PARTS WITH CARE.

Causes of short element life include: severe dust conditions, infrequent servicing, improper cleaning, or contamination by oil or chemical fumes.

COUPLING (Figure 1-7) — The motor and compressor are direct connected by a resilient cushion-type flexible coupling. The coupling does not require lubrication. On all models the coupling cushion member is a one-piece spider-type construction.

CAUTION

THE COUPLING IS ALIGNED AT THE FACTORY. HOWEVER, SINCE THERE MAY HAVE BEEN SETTLING OR DEFLECTION OF THE UNIT THROUGH SHIPMENT OR HANDLING, RECHECKING COUPLING ALIGNMENT IS REQUIRED; REFER TO STEPS 4 THROUGH 8 BELOW.

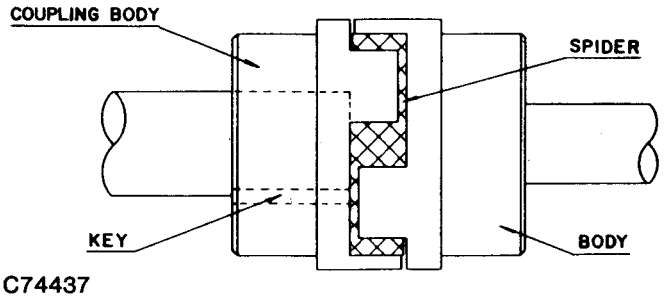

FIGURE 1-7. — COUPLING

For cases where the motor or the compressor has been removed from the base, proceed as follows for coupling alignment.

1. Install motor and/or compressor on mounting pads of base, making sure coupling spider is in place and engage coupling. If shims were used under motor or compressor feet be sure they are in place.

CAUTION

A NEW COMPRESSOR OR MOTOR MAY HAVE A DIFFERENT SHAFT HEIGHT THAN THE PREVIOUS ONE AND REQUIRE ENTIRELY NEW SHIMS.

Install screws in compressor feet and tighten. In unusual cases, it may be necessary to shim and adjust the compressor; however, best alignment procedure is for compressor to remain fixed while the adjustments/shims are made on the motor.

2. Position the coupling body on each shaft (motor and compressor) so that shaft ends are about flush with the face of the body, and flanges rest snugly against the raised dots on the coupling spider faces. When positioning either coupling half on the shaft, make sure the shaft doesn't extend through the coupling to interfere with the spider. Approximate distance between shafts is one (1) inch. Tighten the set screws over the key in each coupling body.

3. Check angular alignment (Figure 2-7, View B) by attaching a dial indicator as shown; base and stem attached to the body of one coupling half, the indicator button resting on the face of the flange of the opposite half. Rotate the coupling and indicator assembly to the top 12 o'clock position and zero the dial. Be sure that the dial button is firmly in contact with the face and that sufficient indicator travel is possible. Tap the indicator face several times to insure return to zero. Rotate the coupling and indicator assembly to the 3, 6 and 9 o'clock positions and record indicator reading at each point. **Maximum allowable indicator reading is .010".** Shim (or lower) motor vertically and/or adjust from side to side until indicator reading is .010" or less.

4. Check parallel alignment (Figure 2-7, View C) by attaching a dial indicator as shown: base and stem attached to the body of one coupling half, the indicator button resting on the outside diameter of the opposite half. Rotate the coupling and indicator assembly to the top 12 o'clock position and zero the dial. Observe the cautions about firm indicator button contact, indicator travel and zeroing outlined in Step 3. Rotate the coupling and indicator assembly to the 3, 6 and 9 o'clock positions and record the indicator reading at each point. **The maximum allowable indicator reading is .010".** Shim (or lower) motor vertically and/or adjust from side to side until indicator reading is .010" or less.

5. Recheck angular alignment to be sure it has not been disturbed.

6. Tighten screws in motor feet evenly. Recheck tightness of screws in compressor feet and in the coupling body.

7. Recheck coupling alignment and adjust if necessary.

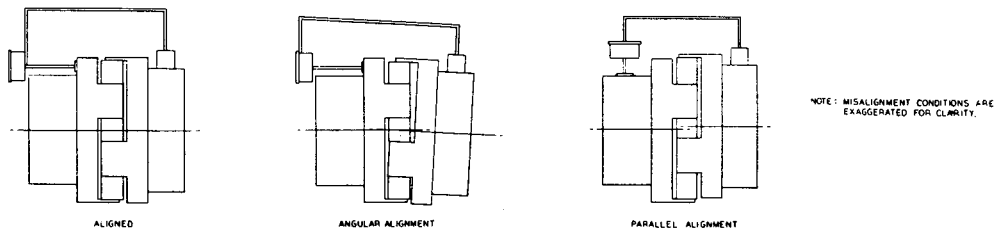

D76865

FIGURE 2-7. — ALIGNMENT OF COUPLING

SECTION 8

MAINTENANCE SCHEDULE

SERVICE CHECK LIST –

Air Filter – Operating conditions determine frequency of service, refer to Section 6, "Air Filters", and plan maintenance accordingly.

Oil Separator – The unit is equipped with pressure differential gauging. Change the oil separator element when the pressure differential gauge indicates an 8 psi differential.

Refer to "Compressor Oil Separator" in Section 5 for further details.

Motor Lubrication – Refer to Section 2.

Every 8 Hours Operation

1. Check the reservoir oil level – add oil if required. See Section 5. If oil consumption is high, refer to "Compressor Oil Consumption" in Section 9.
2. Observe if the unit loads and unloads properly.
3. Drain the moisture trap in the control system. See Section 4.
4. If moisture is noted in the oil level gauge, drain accumulated moisture and see Section 5, "Moisture in the Oil System".

Every 125 Hours Operation

1. Check for dirt accumulation on oil cooler and aftercooler core faces and the cooling fan. If cleaning is required, clean the exterior fin surfaces of the cores by blowing compressed air carrying a nonflammable safety solvent in a direction opposite that of the cooling fan air flow. This cleaning operation will keep the exterior cooling surfaces clean and ensure effective heat dissipation.

Every 1000 Hours Operation

1. Change oil filter element every 1000 hours or when the indicator on filter body is in red range, whichever occurs first.

Every 2000 Hours Operation

1. Change the compressor lubricant. UNDER ADVERSE CONDITIONS, CHANGE MORE FREQUENTLY (refer to "Oil Change Interval" in Section 5). Flush system if required.

Every 4000 Hours Operation

1. Check the oil separator element. See Section 5.

Every 2 Years Operation

1. Replace programmed controller battery. See Section 4.

SECTION 9

TROUBLE SHOOTING

IF UNIT FAILS TO START, check:

1. Wiring system for wrong lead connections.
2. Selector switch — reset if necessary.
3. Fuses in starter/control enclosure.
4. Motor starter overload heaters.
5. Air pressure switch setting.
6. Programmed controller diagnositc indicator lights (see description in this section).

UNIT STARTS BUT STOPS AFTER A SHORT RUN, check:

1. High air discharge temperature caused by:
   a. Low compressor oil level.
   b. Clogged oil cooler or oil filter.
   c. Thermal control (thermostatic mixing) valve stuck.
   d. Accumulation of grease, oil or dirt on exterior fin surfaces of oil cooler.
   e. Poor ventilation of unit.
   f. Water control valve inoperative or water inlet temperature too high.
   g. Magnetic water shutoff valve inoperative.
2. Reservoir/low oil pressure switch setting.
3. Low oil pressure or faulty reservoir/low oil pressure switch.
4. High discharge temperature switch malfunction.
5. Fuses in starter/control enclosure.
6. Motor starter overloads.
7. Programmed controller diagnostic indicator lights (see description in this section).

COMPRESSOR DOES NOT UNLOAD, check:

1. Low demand 4-way valve or pressure switch for malfunction.
2. Control lines for restriction.
3. Air leaks in control system.
4. Inlet valve stuck.
5. Pilot or low demand pressure switch adjustment.
6. Pilot or low demand pressure switch for dirt or leaking diaphragm.

UNIT FAILS TO SHUT DOWN, check:

1, Programmed controller for malfunction (use EMERGENCY STOP and see description in this section).
2. Control lines for restriction or leaks.
3. Low demand pressure switch for dirt or leaking diaphragm.
4. Wiring and tubing to low demand pressure switch.
5. Selector switch for malfunction.

BLOWDOWN VALVE CONTINUES TO PASS AIR, check for:

1. Air leaks in tubing to blowdown valve.
2. Leaking diaphragm in blowdown valve.
3. Low demand 4-way valve for malfunction, coil failure or loose wiring.
4. Programmed controller diagnostic indicator lights (see description in this section).

EXCESSIVE OIL CONSUMPTION, check for:

1. Oil carry-over through discharge line caused by:
   a. Overfilling the reservoir.
   b. Clogged, broken or loose oil return lines.
   c. Ruptured oil separator element.
   d. Loose assembly.
   e. Foam caused by use of incorrect oil.
   f. Inoperative minimum pressure valve.
   g. Dip tube not 1/4"-1/2" from bottom of separator.
2. Oil leaks at all fittings and gaskets.

COMPRESSOR LOW ON DELIVERY AND PRESSURE, check for:

1. Clogged air filter.
2. Restricted inlet valve.
3. Broken inlet valve spring.
4. Binding inlet valve piston.
5. Incorrect motor speed.
6. Pilot adjustment and/or malfunction.
7. Minimum pressure valve stuck closed.

PROGRAMMED CONTROLLER OPERATING INFORMATION –

The programmed controller used in the optional **SELECTRA CON** control system has built in diagnostic features which simplify troubleshooting.

The five (5) LED diagnostic indicator lights (Figure 11-4) provide the information necessary to diagnose any problem with the programmed controller itself.

Power – The "Power" LED is illuminated whenever power is applied and the programmed controller internal fuse is functional. If the "Power" LED is not illuminated, replace internal fuse (see "Programmed Controller Fuse Replacement" in Section 4, "Instruments and Controls".

Run – The "Run" LED is illuminated whenever power is applied and the programmed controller is operational. If the "Run" LED is not illuminated, check the "Halt/Run" switch below the LED indicators. The "Halt/Run" switch must be in the RUN position. If the "Halt/Run" switch is in the RUN position and the "Run" LED is not illuminated, check the "Fault" LED. If the "Fault" LED is illuminated, follow instructions for "Fault" LED below.

Fault – The "Fault" LED is illuminated whenever a failure in the central processing unit (CPU) has been detected. If "fault" LED is illuminated, check "Low Battery" LED.

1. If "Low Battery" LED is illuminated, follow instructions for "Low Battery" LED below.

2. If "Low Battery" LED is not illuminated, disconnect power to compressor by opening main disconnect switch and remove memory module (see "Memory Module" in Section 4, "Instruments and Controls"). Restore power and observe "Fault" LED.

   a. If "Fault" LED is not illuminated, memory module is defective and must be replaced. Turn power off before replacing defective memory module.

   b. If "Fault" LED remains illuminated, programmed controller is no longer functional and must be replaced.

Low Battery – The "Low Battery" LED is illuminated whenever the remaining life in the programmed controller battery is less than two weeks. See "Programmed Controller Battery Replacement" in Section 4, "Instruments and Controls". For best results, replace battery immediately. Compressor is still operational, however, until remaining battery life is exhausted, AND power is turned off. If compressor is operated while "Low Battery" LED is illuminated, use "Selector Switch" to stop compressor. DO NOT USE "EMERGENCY STOP" SWITCH EXCEPT IN AN EMERGENCY OR WHEN REPLACEMENT BATTERY IS AVAILABLE. If "Emergency Stop" switch is no longer functional, the battery must be replaced before the compressor can be restarted. If the battery is not functional, the "Fault" LED as well as the "Low Battery" LED will be illuminated when power is restored.

PROM – The "PROM" LED is illuminated whenever a memory module (PROM) is installed. If the "PROM" LED is not illuminated, check that memory module is installed properly (see "Memory Module" in Section 4, "Instruments and Controls").

Programmed Controller Input Lights (Figure 11-4) – There are 14 LED indicator lights which indicate the status of each input. Refer to wiring diagrams in Section 4 for information concerning the input lights.

SECTION 10

REBUILDING DATA

Rebuilding data for the direct drive bare compressor used on Models ECMPKC and ECMPLC is shown below.
(Dimensions in 2 decimal places may vary ±.020)

DIMENSIONS

Center of Main Bore to Center of Secondary Bore	6.249/6.251
Cylinder Bore Diameter —	
Main	8.1393/8.1424
Secondary	7.5072/7.5103
Cylinder Length	13.490/13.486
Rotor Body O.D. —	
Main	8.1304/8.1296
Secondary	7.4992/7.4983
Main Rotor Body Length	13.470/13.468
Secondary Rotor Body Length (Based on Compressor Capacity)	
	13.470/13.468
	13.020/12.980
	11.520/11.480
	11.000/10.980
Inlet End Air Seal Diameter (Main and Secondary Rotors)	3.200/3.199
Discharge End Air Seal Diameter (Main and Secondary Rotors)	3.000/2.999
Inlet End Plate Air Seal Bore (Main and Secondary)	3.210/3.211
Discharge End Plate Air Seal Bore (Main and Secondary)	3.010/3.011
Main Rotor Body Air Seal Length * —	
Inlet	1.270/1.265
Discharge	1.40
Secondary Rotor Air Seal Length * —	
Inlet	1.270/1.265
Discharge	1.490/1.485
Main Rotor Shaft Bearing Journal Diameter —	
Inlet	2.3632/2.3627
Discharge	2.4390/2.4385
Main Rotor Shaft Bearing Journal Length —	
Inlet	1.485/1.475
Discharge	1.920/1.875
Secondary Rotor Shaft Bearing Journal Diameter —	
Inlet	2.3632/2.3627
Discharge	2.5015/2.5010
Secondary Rotor Shaft Bearing Journal Length —	
Inlet	.995/.910
Discharge	2.335/2.340
Main Rotor Bearing Bore Diameter —	
Inlet	5.1181/5.1193
Discharge	5.3730/5.3740
Secondary Rotor Bearing Bore Diameter —	
Inlet	4.3307/4.3321
Discharge	4.4387/4.4397
Inlet End Bearing Bore Shoulder to Seal Housing End Face of Bearing Housing (Main and Secondary)	2.000/1.995

* Includes any radii, chamfer or undercut.

DIMENSIONS (Continued)

Discharge End Bearing Bore Shoulder to Cylinder End Face of Bearing Housing (Main and Secondary)	1.500/1.495
Main Rotor Inlet Bearing Snap Ring Groove —	
Diameter	5.256/5.268
Width	.079/.084
Secondary Rotor Inlet Bearing Snap Ring Groove —	
Diameter	4.454/4.466
Width	.068/.073
Inlet Bearing Bore Shoulder to Inner Face of Snap Ring Groove —	
Main	1.225/1.230
Secondary	.870/.875
Main Rotor Shaft Seal Diameter	1.876/1.874
Main Rotor Shaft Seal Diameter Length *	2.25
Seal Housing Bore	2.624/2.626
Seal Housing Seal Bore Shoulder to Bearing Housing End Face of Seal Housing	1.480/1.485
Main Rotor Shaft Coupling Diameter	1.750/1.749
Main Rotor Shaft Coupling Diameter Length	3.30

FITS

Main Rotor Bearing Inner Race to Shaft —	
Inlet	.0005T/.0016T
Discharge	.0005T/.0015T
Main Rotor Bearing Outer Race to Bore —	
Inlet	.0000/.0020L
Discharge	.0010T/.0030T
Secondary Rotor Bearing Inner Race to Shaft —	
Inlet	.0005T/.0016T
Discharge	.0005T/.0015T
Secondary Rotor Bearing Outer Race to Bore —	
Inlet	.0000/.0020L
Discharge	.0002L/.0022L
Main Rotor Shaft to Coupling	.000/.002L

RUNNING CLEARANCES

Rotor to Cylinder — Diametral	
Main	.0090/.0139
Secondary	.0090/.0140
End Plate to Rotor — Axial	
Inlet	.012/.020
Discharge	.002/.004
Air Seals — Diametral	.010/.012

Rebuilding data for the direct drive bare compressor used on Models ECPQMC and ECPSMC is shown below.
(Dimensions in 2 decimal places may vary ±.020)

DIMENSIONS

Center of Main Bore to Center of Secondary Bore	6.876/6.874
Cylinder Bore Diameter —	
Main	8.9535/8.9566
Secondary	8.2581/8.2613
Cylinder Length	15.230/15.226
Rotor Body O.D. —	
Main	8.9436/8.9427
Secondary	8.2491/8.2483
Main Rotor Body Length	15.210/15.208
Secondary Rotor Body Length	15.210/15.208
Main and Secondary Rotor Air Seal Diameter (Inlet and Discharge)	3.500/3.499
Endplate Air Seal Bore for Main and Secondary Rotors (Inlet and Discharge)	3.510/3.511
Main Rotor Air Seal Length * —	
Inlet	1.270/1.265
Discharge	1.40
Secondary Rotor Air Seal Length * —	
Inlet	1.270/1.265
Discharge	1.490/1.485
Main Rotor Shaft Bearing Journal Diameter —	
Inlet	2.5601/2.5596
Discharge	2.7515/2.7510
Main Rotor Shaft Bearing Journal Length —	
Inlet	1.485/1.475
Discharge	1.730/1.685
Secondary Rotor Shaft Bearing Journal Diameter —	
Inlet	2.5601/2.5596
Discharge	2.8765/2.8760
Secondary Rotor Shaft Bearing Journal Length —	
Inlet	.995/.910
Discharge	2.375/2.360
Main Rotor Bearing Bore Diameter —	
Inlet	5.5118/5.5130
Discharge	5.7480/5.7490
Secondary Rotor Bearing Bore Diameter —	
Inlet	4.7244/4.7258
Discharge	4.6262/4.6272
Inlet End Bearing Bore Shoulder to Seal Housing Face of Bearing Housing (Main and Secondary)	2.250/2.245
Discharge End Bearing Bore Shoulder to Cylinder End Face of Bearing Housing (Main and Secondary)	1.500/1.495
Main Rotor Inlet Bearing Snap Ring Groove —	
Diameter	5.520/5.525
Width	.079/.084

DIMENSIONS

Secondary Rotor Inlet Bearing Snap Ring Groove —	
Diameter	4.858/4.870
Width	.079/.084
Inlet Bearing Bore Shoulder to Face of Snap Ring Groove —	
Main	1.305/1.310
Secondary	.910/.915
Main Rotor Shaft Seal Diameter	2.251/2.249
Main Rotor Shaft Seal Diameter Length *	2.45
Seal Housing Seal Bore Diameter	3.124/3.126
Seal Housing Seal Bore Shoulder to Bearing Housing End Face of Seal Housing	1.480/1.485
Main Rotor Shaft Coupling Diameter	2.125/2.124
Main Rotor Shaft Coupling Diameter Length	3.80

FITS

Main Rotor Bearing Inner Race to Shaft —	
Inlet	.0005T/.0016T
Discharge	.0005T/.0015T
Main Rotor Bearing Outer Race to Bore —	
Inlet	.0000/.0020L
Discharge	.0010/.0030T
Secondary Rotor Bearing Inner Race to Shaft —	
Inlet	.0005T/.0016T
Discharge	.0005T/.0015T
Secondary Rotor Bearing Outer Race to Bore —	
Inlet	.0000/.0020L
Discharge	.0000/.0022L
Main Rotor Shaft to Coupling	.000/.002L

RUNNING CLEARANCES

Rotor to Cylinder — Diametral	
Main	.010/.014
Secondary	.010/.013
End Plate to Rotor — Axial	
Inlet	.012/.020
Discharge	.002/.004
Air Seals — Diametral	.010/.012

Gardner Denver

For additional information contact your local representative or
Gardner Denver Machinery Inc., Customer Service Department,
1800 Gardner Expressway, Quincy, Illinois 62301
Telephone: (800) 682-9868 FAX: (217) 224-7814

GARDNER DENVER ISO 9001 CERTIFIED QUALITY SYSTEM

Sales and Service in all major cities.

For parts information, contact Gardner Denver,
Master Distribution Center, Memphis, TN
Telephone: (800) 245-4946 FAX: (901) 542-6159

Specifications subject to change without notice.
Copyright 1996 Gardner Denver Machinery Inc.

Litho in U.S.A.