13-18-507
Version: 01
February 24, 2016

VARIABLE SPEED SINGLE STAGE BASE-MOUNTED COMPRESSOR

AIRSMART™ - CONTROLLER

MODELS

VS45B, VS50B, VS70B

45-50-70 kW

60 HZ

PARTS LIST

MAINTAIN COMPRESSOR RELIABILITY AND PERFORMANCE WITH GENUINE GARDNER DENVER® COMPRESSOR PARTS AND SUPPORT SERVICES

Gardner Denver® Compressor genuine parts, manufactured to design tolerances, are developed for optimum dependability ï specifically for Gardner Denver compressor systems. Design and material innovations are the result of years of experience with hundreds of different compressor applications. Reliability in materials and quality assurance is incorporated in our genuine replacement parts.

Your authorized Gardner Denver Compressor distributor offers all the backup youâ need. A worldwide network of authorized distributors provides the finest product support in the air compressor industry.

Your authorized distributor can support your Gardner Denver air compressor with these services:

1. Trained parts specialists to assist you in selecting the correct replacement parts.
2. Factory warranted new and remanufactured rotary screw airends. Most popular model remanufactured airends are maintained in stock at the factory, for purchase on an exchange basis with liberal core credit available for the replacement unit.
3. A full line of factory tested AEONÊ compressor lubricants specifically formulated for use in Gardner Denver compressors.
4. Repair and maintenance kits designed with the necessary parts to simplify servicing your compressor.

Authorized distributor service technicians are factory trained and skilled in compressor maintenance and repair. They are ready to respond and assist you by providing fast, expert maintenance and repair services.

To Contact Gardner Denver or locate your local distributor:

visit: www.contactgd.com/compressors

or

call: (217)222-5400

INSTRUCTIONS FOR ORDERING REPAIR PARTS

When ordering parts, specify Compressor MODEL, Method of Cooling, HORSEPOWER and SERIAL NUMBER (see nameplate on unit). The Airend Serial Number is also stamped on top of the discharge bearing carrier casting.

All orders for Parts should be placed with the nearest authorized distributor.

Where NOT specified, quantity of parts required per compressor or unit is one (1); where more than one is required per unit, quantity is indicated in parenthesis. SPECIFY EXACTLY THE NUMBER OF PARTS REQUIRED.

DO NOT ORDER BY SETS OR GROUPS.

To determine the Right-Hand and Left-Hand side of a compressor, stand at the motor end and look toward the compressor. Right-Hand and Left- Hand are indicated in parenthesis following the part name, i.e. (RH) and (LH), when appropriate.

TOTAL PRODUCT SUPPORT – GARDNER DENVER'S CONTINUING COMMITMENT TO YOUR AIR COMPRESSOR PERFORMANCE

Commitment to total product support continues long after the purchase of your quality Gardner Denver rotary screw compressor.

Gardner Denver original parts incorporate years of experience and improvements in design, materials and quality assurance. Maintaining your compressor investment with Gardner Denver parts will insure protection for the air compressor unit and long, dependable service life.

Your authorized Gardner Denver compressor distributor maintains a complete stock of all common maintenance parts, factory approved AEON lubricants, and Gardner Denver factory warranted exchange airends. In addition, authorized distributor technicians are factory trained, and can provide complete diagnostic, compressor maintenance and repair services.

This manual is designed to assist you in maintaining high performance and receiving many years of dependable service you expect from your Gardner Denver compressor.

REMANUFACTURED AIRENDS

Whenever an airend requires replacement or repair, Gardner Denver offers an industry unique, factory remanufactured airend exchange program. From its modern factory, Gardner Denver is committed to supplying you with the highest quality, factory remanufactured airends that are guaranteed to save you time and money.

Immediately Available

Repair downtime costs you money, which is why the most popular models are in inventory at all times.

Skilled Craftsmen

Our Remanufacturing assembly technicians average over 20 years experience with air compression products.

Precision Remanufacturing

All potentially usable parts are thoroughly cleaned, inspected and analyzed. Only those parts that can be brought back to original factory specifications are remanufactured. Every remanufactured airend receives a new overhaul kit: bearings, gears, seals, sleeves and gaskets.

Extensive Testing

Gardner Denver performs testing that repair houses just donôt do. Magnaflux and ultrasonic inspection spot cracked or stressed castings, monochromatic light analysis exposes oil leaks, and coordinate measurement machine inspects to +/- .0001ò, insuring that all remanufactured airends meet factory performance specifications.

Warranty

Gardner Denver backs up every remanufactured airend with a new warrantyé 27 months from purchase, 24 months from service.

Gardner Denver remanufactured airends deliver quality without questioné year in and year out.

Call Gardner Denver for information on the airend exchange program and the name of your authorized distributor.

Phone Number: (217) 222-5400 or
Fax: (217) 224-7814

TABLE OF CONTENTS

Maintain Compressor Reliability And Performance With
Genuine Gardner Denver Compressor Parts And Support Services 1
Instructions For Ordering Repair Parts 1
Total Product Support ï Gardner Denverôs Continuing Commitment To
Your Air Compressor Performance 2
Remanufactured Airends 2
Airend Cross Section (Enduro 25+) 4
Airend Bolts And Plugs (Enduro 25+) 5
Inlet Valve 6
Tempest 25 Compressor Parts 7, 8
Minimum Pressure/Check Valve 9, 10
Base, Airends And Motors 11, 12
Air Inlet Group 13
VS45 Discharge Manifold Group 14
VS50 & 70 Discharge Manifold Group` 15
Motor Lubrication 16
Cooling Group ï VS45 (Air-Cooled) 17, 18
Cooling Group ï VS50 & 70 (Air-Cooled) 19, 20
Cooling Group ï VS45-50 (Water-Cooled) With Shut-Off Valve 21, 22
Cooling Group ï VS70 (Water-Cooled) With Shut-Off Valve 23, 24
Cooling Group ï VS45-50 (Water-Cooled) With Temp Regulator & Shut-Off Valve 25, 26
Cooling Group ï VS70 (Water-Cooled) With Temp Regulator & Shut-Off Valve 27, 28
Control Tubing Group ï VS45 ..... 29, 30
Control Tubing Group ï VS50 & VS70 ..... 31, 32
Dryer Assembly - Air-Cooled VS45 ..... 33, 34
Dryer Assembly - Air-Cooled VS50 & 70 ..... 35, 36
Dryer Assembly - Water-Cooled VS45 & 50 ..... 37, 38
Dryer Assembly - Water-Cooled VS70 ..... 39, 40
Enclosure ï Internal Parts 41, 42
Enclosure ï External Parts 43, 44
Identification And Instruction Group 45-48
Controller Box (Air-Cooled) 49, 50
Controller Box (Water-Cooled) 51, 52
Controller Box ï 575 Volt 53, 54
Miscellaneous Electrical Parts 55, 56
Moisture Separator With Trap (VP1021702) 57
Moisture Separator With Trap (VP1021703) 58
Repair Kits 59-63
10 Year Warranty Kit 63

For Operating and Service Instructions, see:

Service Manual:	13-18-601
Controller Manual:	13-17-600
Dryer Manual:	13-18-605
Communication Module	13-17-604

Order by Part Number and Description. Reference Numbers are for your convenience only.

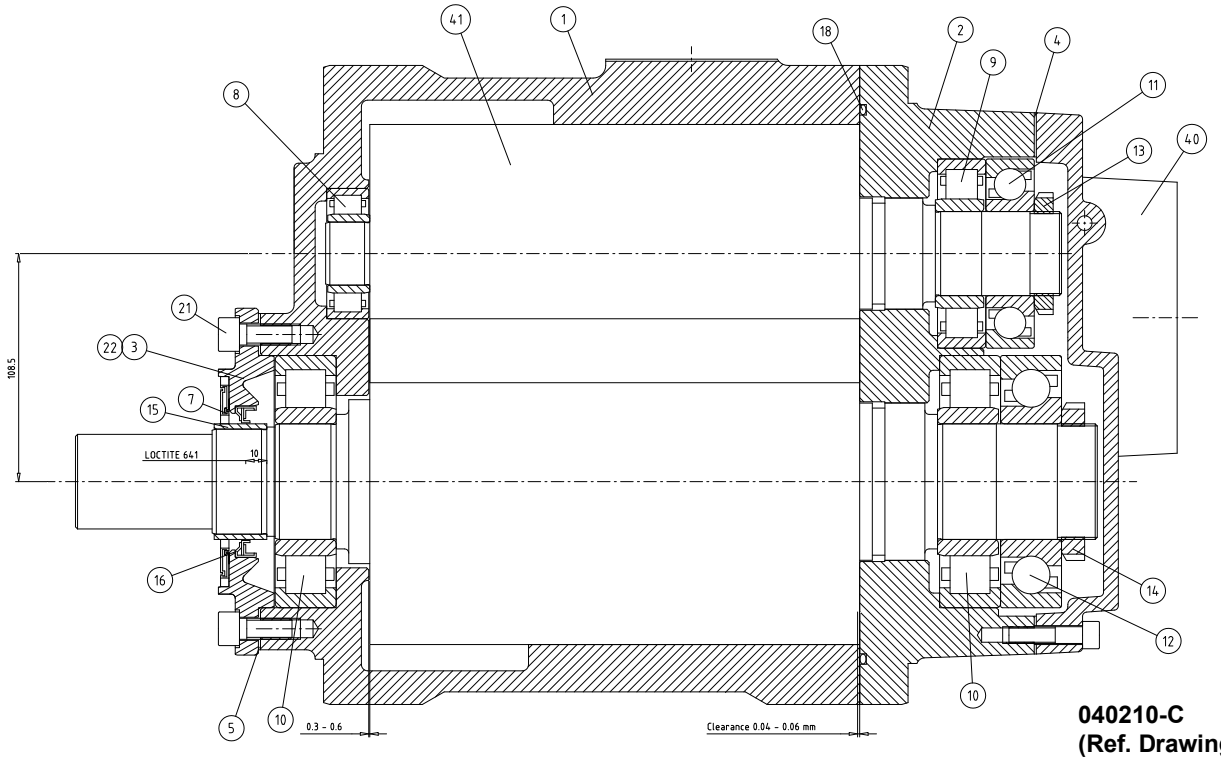

040210-C
(Ref. Drawing)

AIREND CROSS SECTION
(ENDURO 25+)

Ref. No.	Name of Part	Qty.	B/M: 50584054; 50584050 Part No.
1	CYLINDER	1	
2	DISCHARGE BEARING HOUSING E25+	1	
3	SEAL HOUSING E25+	1	
** 4	GASKET	1	22324258
*** 5	GASKET	1	30809118
*** 7	PROTECTION RING	1	VP1016844
* 8	ROLLER BEARING	1	12BA226
* 9	ROLLER BEARING	1	12BA227
* 10	ROLLER BEARING	2	87284739
* 11	BALL BEARING	1	12BA230
* 12	BALL BEARING	1	87457139
* 13	NUT	1	86912899
* 14	NUT	1	87455529
*** 15	WEAR SLEEVE	1	89533519
*** 16	SEAL SHAFT	1	89556219
** 18	O-RING	1	87284609
21	SCREW	6	
22	SCREW, PLUG	1	87089899
40	DISCHARGE FLANGE	1	
41	ROTOR		
	FEMALE E25+	1	
	MALE E25+	1	

* Parts included in Bearing Kit Part Number 305CGD6013. Refer to page 60.
** Parts included in Gasket Kit Part Number 306CGD6013 (includes Shaft Seal Kit). Refer to page 60.
*** Parts included in Shaft Seal Kit Part Number 300CGD6029. Refer to page 60.

Order by Part Number and Description. Reference Numbers are for your convenience only.

AIREND BOLTS AND PLUGS
(ENDURO 25+)

040210-C
(Ref. Drawing)

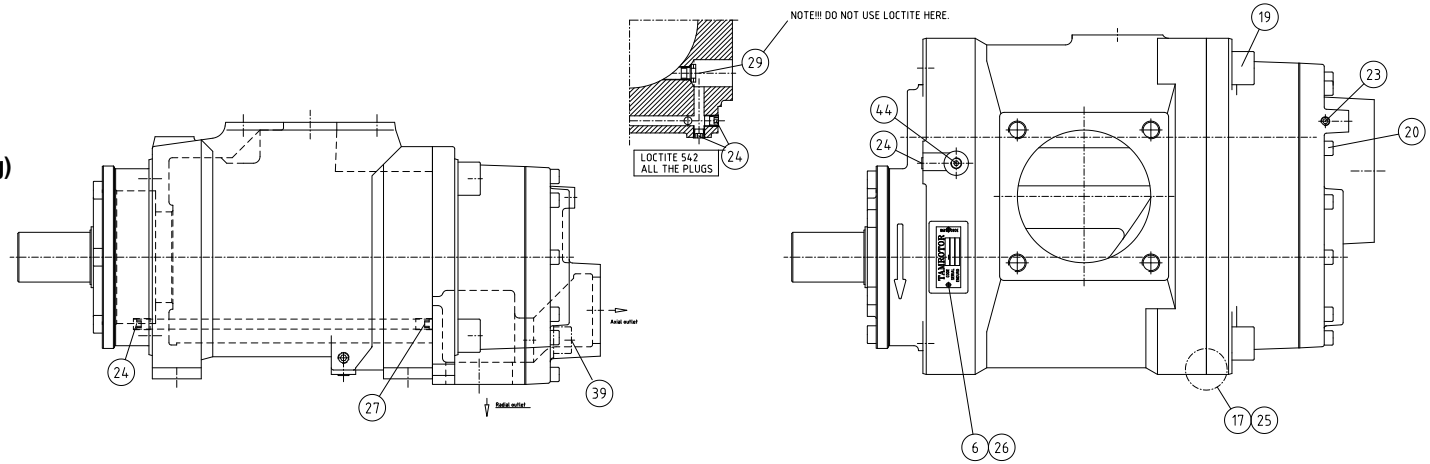

Ref. No.	Name of Part	Qty.	B/M: 50584054; 50584050 Part No.
* 17	O-RING	2	87908849
19	SCREW	4	44586350
20	SCREW	11	665SMCA08035Z
23	PLUG	3	64AA47
24	PLUG	8	64AA48
* 25	PIN	2	62M178
27	SCREW	1	76F158
28	PLUG	1	64AA55
29	NOZZLE	1	30832268
39	SCREW	2	665SMCA16045Z

* Parts included in Gasket Kit Part Number 306CGD6013 (Includes Shaft Seal Kit). Refer to page 60.

AIREND REPAIR KITS

Model	KW	PSI	Replacement Airend Kit	Bearing Kit	Inlet Valve Repair Kit	Drive Shaft Seal Kit	Package Tool Kit	Coupling Tool Kit
VS45-70A	45, 50 & 70	100-175	304CGD6013	305CGD6013	VP1011308	300CGD6029	301CGD6031	300CGD6031

Order by Part Number and Description. Reference Numbers are for your convenience only.

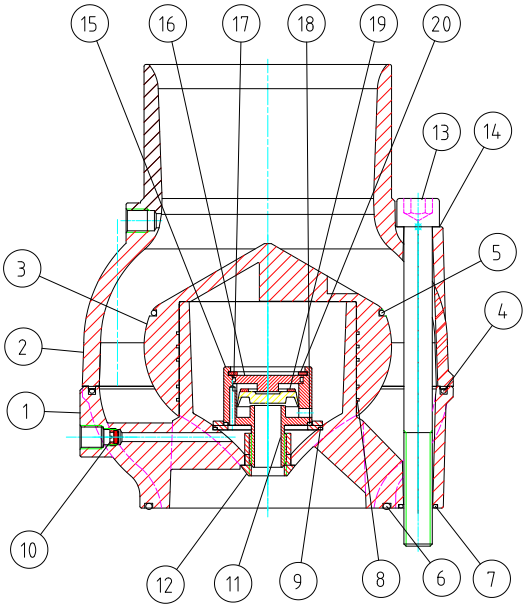

INLET VALVE

Ref. No.	Name of Part	Qty.	B/M: TEN000650 Part No.
1	HOUSING E25 INLET VALVE	1	VP1011289
2	HOUSING E25 INLET VALVE	1	VP1011290
* 3	POPPET	1	VP1011291
*+ 4	O-RING	1	VP1011292
*+ 5	GASKET	1	VP1011293
*+ 6	O-RING	1	VP1011294
*+ 7	O-RING	4	VP1011295
*+ 8	O-RING	1	VP1011296
*+ 9	O-RING	1	VP1011297
10	BREATHER VALVE	1	VP1011298
11	RISER RING	1	VP1011299
12	COLLAR	1	VP1011300
13	SCREW	4	VP1011302
*+ 14	WASHER	1	VP1011246
15	EXHAUST VALVE BODY	1	VP1011247
16	EXHAUST VALVE COVER	1	VP1011248
*+ 17	O-RING	1	VP1011251
*+ 18	O-RING	1	VP1011250
*+ 19	GASKET	1	TEN000658
*+ 20	LOCK RING	1	VP1011252

* Parts included in Inlet Valve Repair Kit Part Number TEN000666. Refer to page 59.
\+ Parts included in Inlet Valve Seal Kit Part Number TEN000665. Refer to page 59.

Note: Individual parts that appear in Kits are not available for purchasing.

TEMPEST 25 COMPRESSOR PARTS

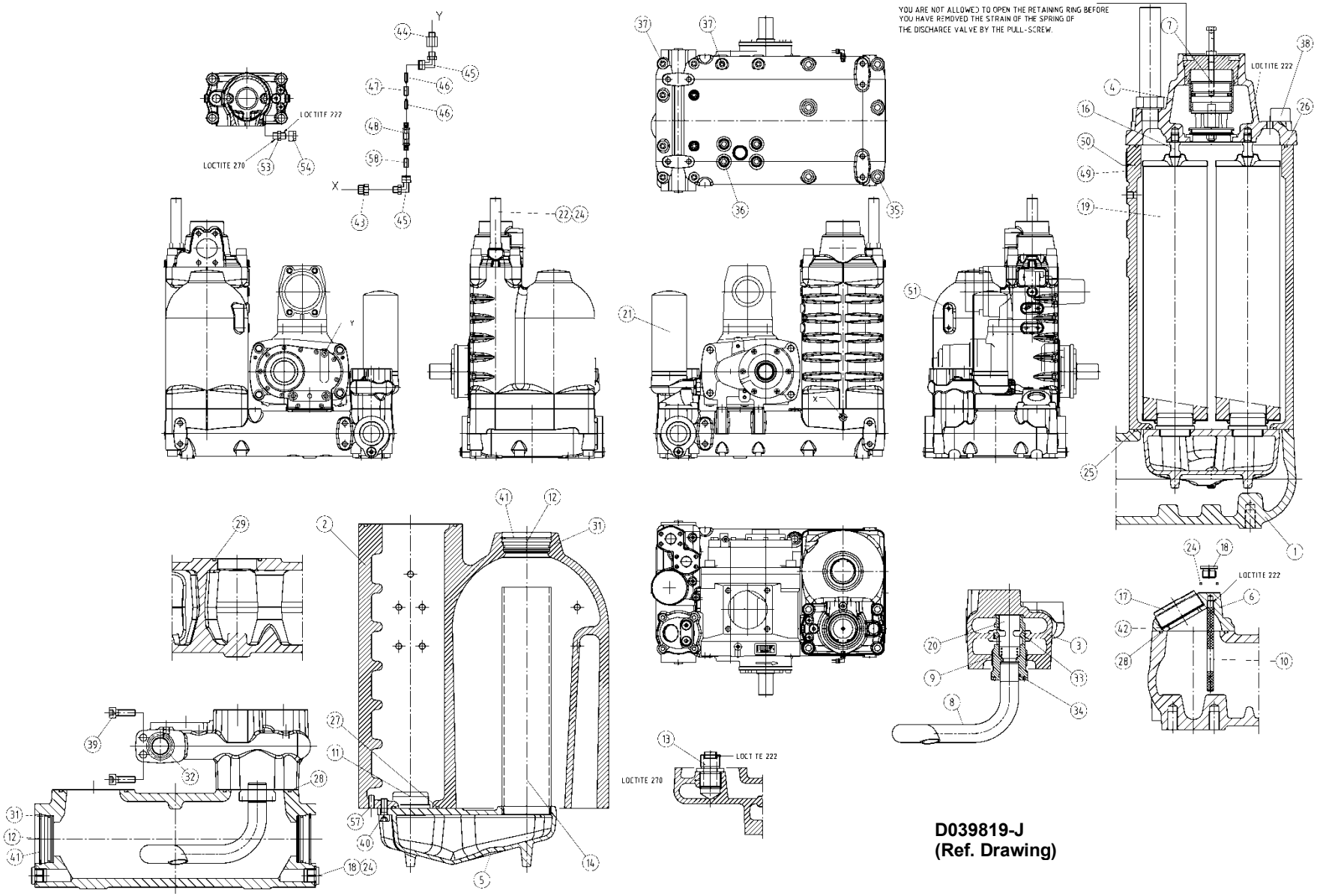

D039819-J
(Ref. Drawing)

Order by Part Number and Description. Reference Numbers are for your convenience only.

TEMPEST 25 COMPRESSOR PARTS

B/M: 03981942

Ref. No.	Name of Part	Qty.	Part No.	Ref. No.	Name of Part	Qty.	Part No.
1	FRAME	1	04029058	28	O-RING	2	86906369
2	SEPARATOR HOUSING	1	04029188	29	O-RING	1	89730359
3	FILTER HOUSING	1	03982008	31	O-RING	3	80704929
4	HOUSING	1	03982138	32	O-RING	1	89565109
5	AIR DUCT	1	03823048	33	O-RING	1	89560299
6	COVER	1	20001389	34	O-RING	1	89725659
7	MIN PRESSURE/CHECK VALVE ASSM (See pages 9 & 10)	1	37641798	35	SCREW	6	87465689
8	OIL TUBE	1	20002378	36	SCREW	4	89730229
9	SUCTION TUBE	1	37648348	37	SCREW	10	89730109
10	OIL SITE GLASS MEASURING ROD	1	30899608	38	SCREW	4	89729719
11	ADAPTOR	2	30934298	39	SCREW	2	665SMCA10030Z
12	FLANGE	3	30899858	40	SCREW	3	665SMCA1002
13	NIPPLE	1	30949418	41	RETAINING RING	3	80011019
14	AIR SEPARATION SHOTGUN	1	30949548	42	O-RING	1	25BC717
16	STUD	2	30977918	43	NIPPLE	1	81344929
17	SIGHT GLASS	1	CC1025419	44	NIPPLE	1	89573119
18	PLUG	5	03381178	45	NIPPLE	2	81744279
**19	OIL COALESCING ELEMENT	2	VP1038827	46	ORFICE	1	30895408
20	BLANKING ADAPTOR	1	30918688	47	PLASTIC TUBE (IN FEET)	1	85200299
***21	OIL FILTER	1	89755919	*48	CHECK VALVE	1	CC1040088
22	PRESSURE RELIEF VALVE	1	VP1027033	51	PLUG	4	64AA55
24	GASKET	6	80034799	52	NOZZLE	1	30832268
25	O-RING	1	25BC905	53	NIPPLE	1	81288279
**26	O-RING	1	8973509	54	PLUG	1	85842839
27	O-RING	1	89730489	57	PIN	1	VP1040742

* Parts included in Pneumatic Control Kit, Part Number 308CGD6013. Refer to page 59.
** Parts included in Oil Separator Kit number 302EFE6013. Refer to page 5959.
*** Parts included in Routine Maintenance Kit number 300CGD6013. Refer to page 59

MINIMUM PRESSURE/CHECK VALVE

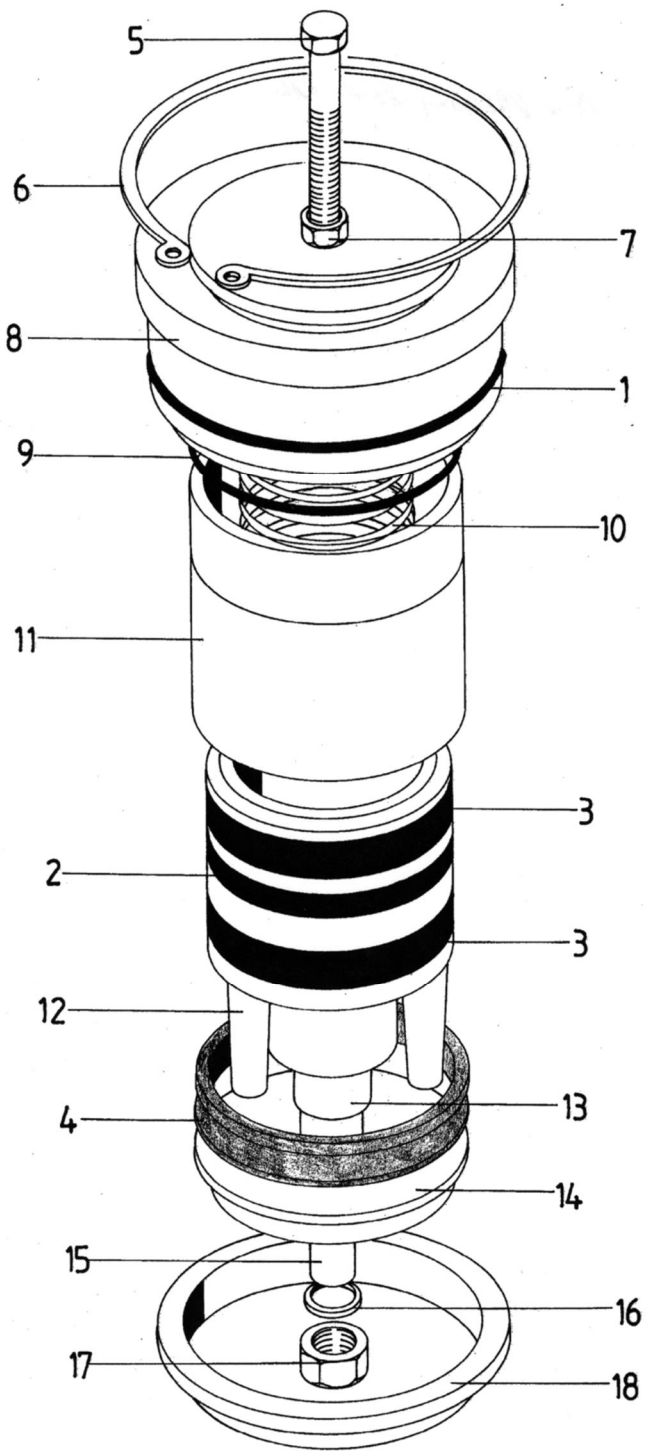

Order by Part Number and Description. Reference Numbers are for your convenience only.

MINIMUM PRESSURE/CHECK VALVE

B/M: 37641798

Ref. No.	Name of Part	Qty.	Part No.
	SEAL KIT ASSEMBLY, (includes Items 1-4)	1	89783319
	REPAIR KIT ASSEMBLY (includes Items 1-4, 9, 10, 12-17)	1	89808639
1	O-RING	1	
2	GASKET	1	
3	SLIDE RING	2	
4	PLATE GASKET	1	
5	SCREW	1	
6	RETAINING RING	1	
7	NUT	1	
8	COVER	1	
9	O-RING	1	
10	SPRING	1	
11	TUBE	1	
12	PISTON	1	
13	BEARING BUSHING	1	
14	PLATE	1	
15	ARM	1	
16	GASKET	1	
17	NUT	1	
18	THRUST RING	1	

BASE, AIRENDS AND MOTORS

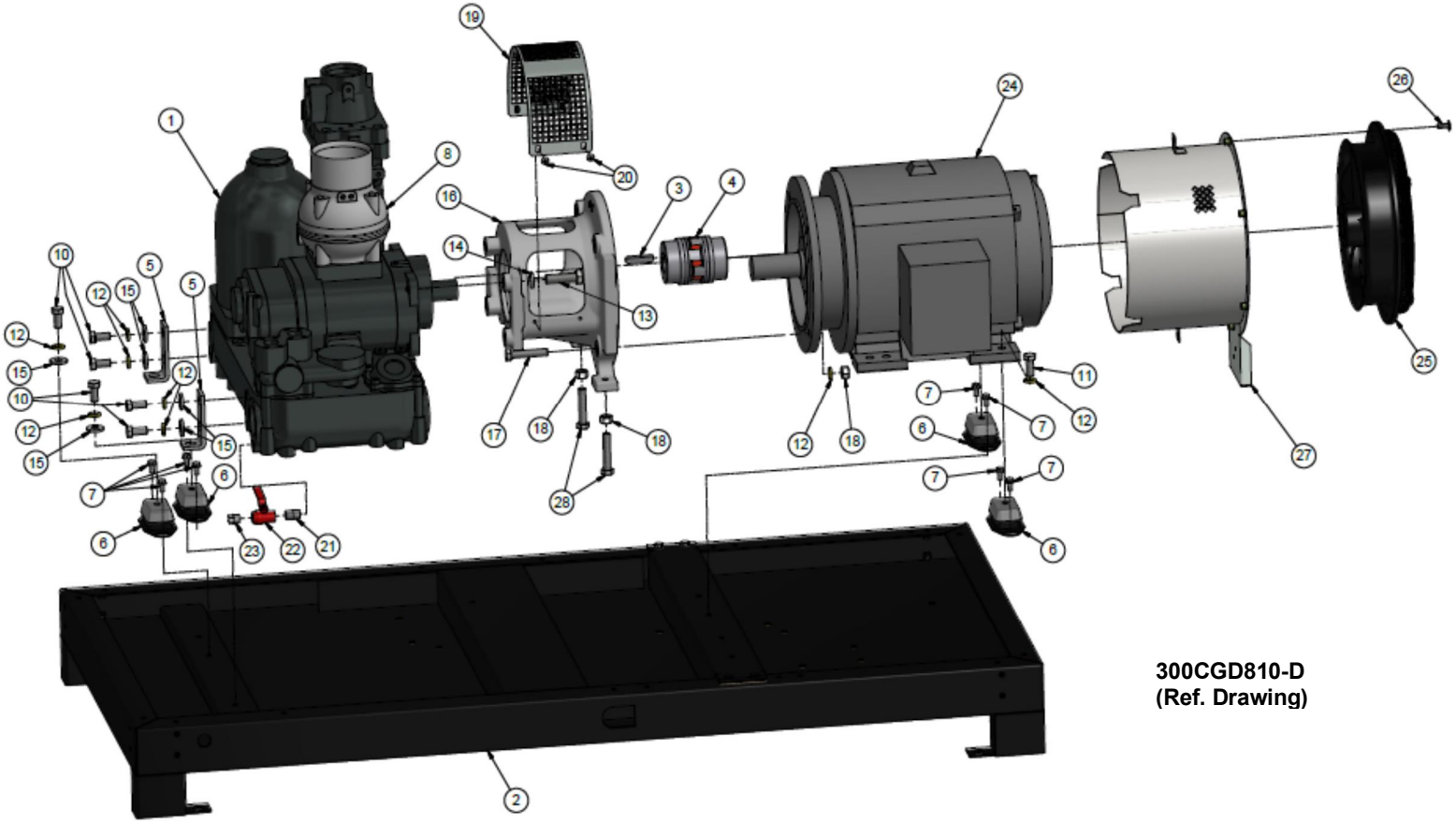

300CGD810-D
(Ref. Drawing)

Order by Part Number and Description. Reference Numbers are for your convenience only.

BASE, AIRENDS AND MOTORS

B/M: 300CGD4001; 300 thru 304CGD4015

Ref. No.	Name of Part	Qty.	Part No.
1	INTEGRATED AIREND, T25	1	300CGD10950
	TEMPEST 25, BASIC PARTS GROUP (See page 8)	1	03981942
	AIREND E25+ (See Pages 4 & 5)	1	05084054
	INLET VALVE, E25+ (See Page 6)	1	89863789
2	BASE	1	20500001
3	KEY	1	35L91
* 4	COUPLING ASSEMBLY	1	CC1008548
	COUPLING HUB, AIREND SIDE	1	VP1010849
	COUPLING HUB, MOTOR SIDE	1	VP1008520
	COUPLING SPIDER	1	VP1008521
5	SUPPORT	2	20500019
6	VIBRATION ISOLATOR	4	49C116
7	SCREW	8	75LM51
8	INLET VALVE	1	89863789
10	SCREW	6	665HMCA16035Z
11	SCREW	2	665HMCA16045Z
12	WASHER	12	671HLHR16Z
13	SCREW	4	665HMCA20070Z
14	WASHER	4	671HLHR20Z
15	WASHER	6	95A7Z
16	COUPLING-HOUSING	1	20500023
17	SCREW	4	665HMCA16085Z
18	NUT	6	668RMCA16Z
19	GUARD	1	20500055
20	SCREW	4	75G69
21	NIPPLE	1	86H154
22	BALL VALVE	1	90AR360
23	PLUG	1	64AA7
24	MOTOR - 460V		
	VS45	1	90500009
	VS50	1	90500010
	VS70	1	24CA7404
24	MOTOR - 575V		
	VS45	1	N/A
	VS50	1	90500158
	VS70	1	24CA7442
25	FAN/MOTOR ASSEMBLY		
	460V	1	VP1012290
	575V	1	VP1024771
26	SCREW - 460V		
	VS45, VS50 & VS70	6	75LM50
26	SCREW - 575V		
	VS50 & VS70	4	75LM47
27	SUPPORT		
	460V	1	20500079
	575V	1	CC1024772
28	SCREW	2	665HMCA16085AZ

* Removal & Installation of Coupling requires Tool Kit 300CGD6031. Refer to page 59.

Order by Part Number and Description. Reference Numbers are for your convenience only.

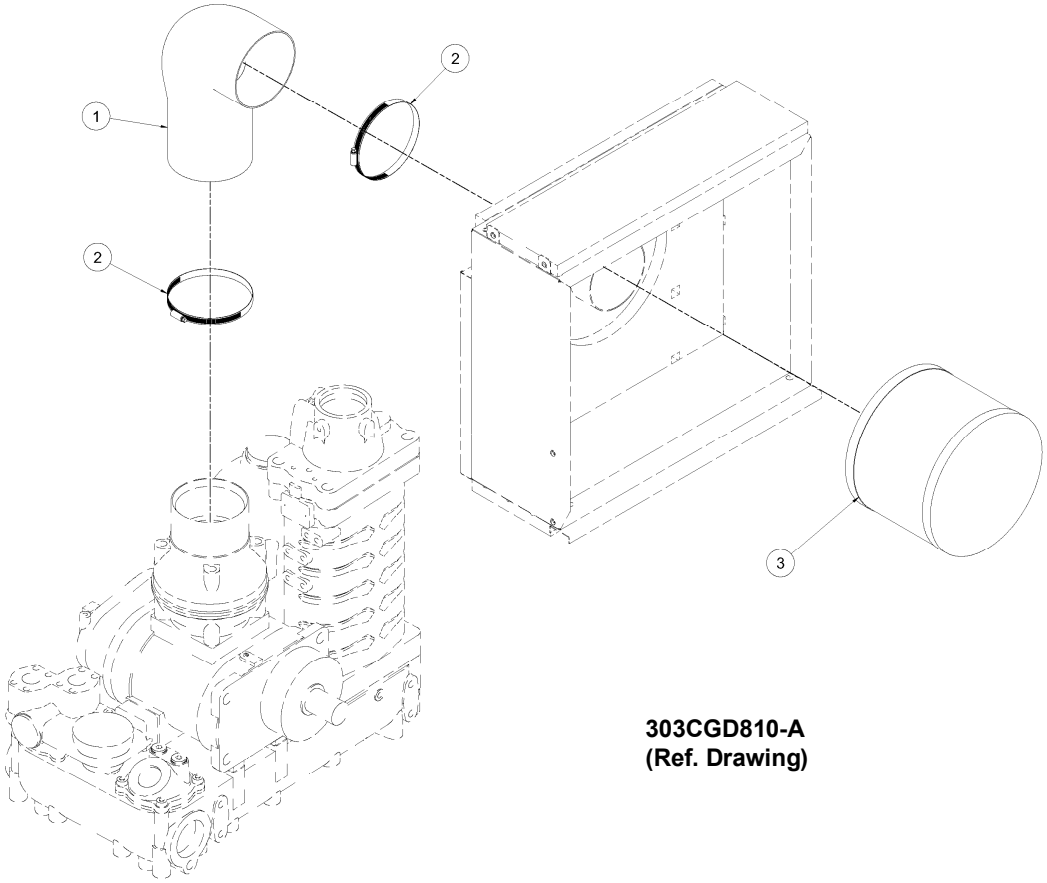

303CGD810-A
(Ref. Drawing)

AIR INLET GROUP

	Ref. No.	Name of Part	Qty.	B/M: 302CGD4013 Part No.
	1	INLET HOSE.....	1	VP1036691
	2	CLAMP	2	2009825
*	3	AIR FILTER	1	VP1008518

* Included in Routine Maintenance Kit Part Number 300CGD6013. Refer to page 59.

Order by Part Number and Description. Reference Numbers are for your convenience only.

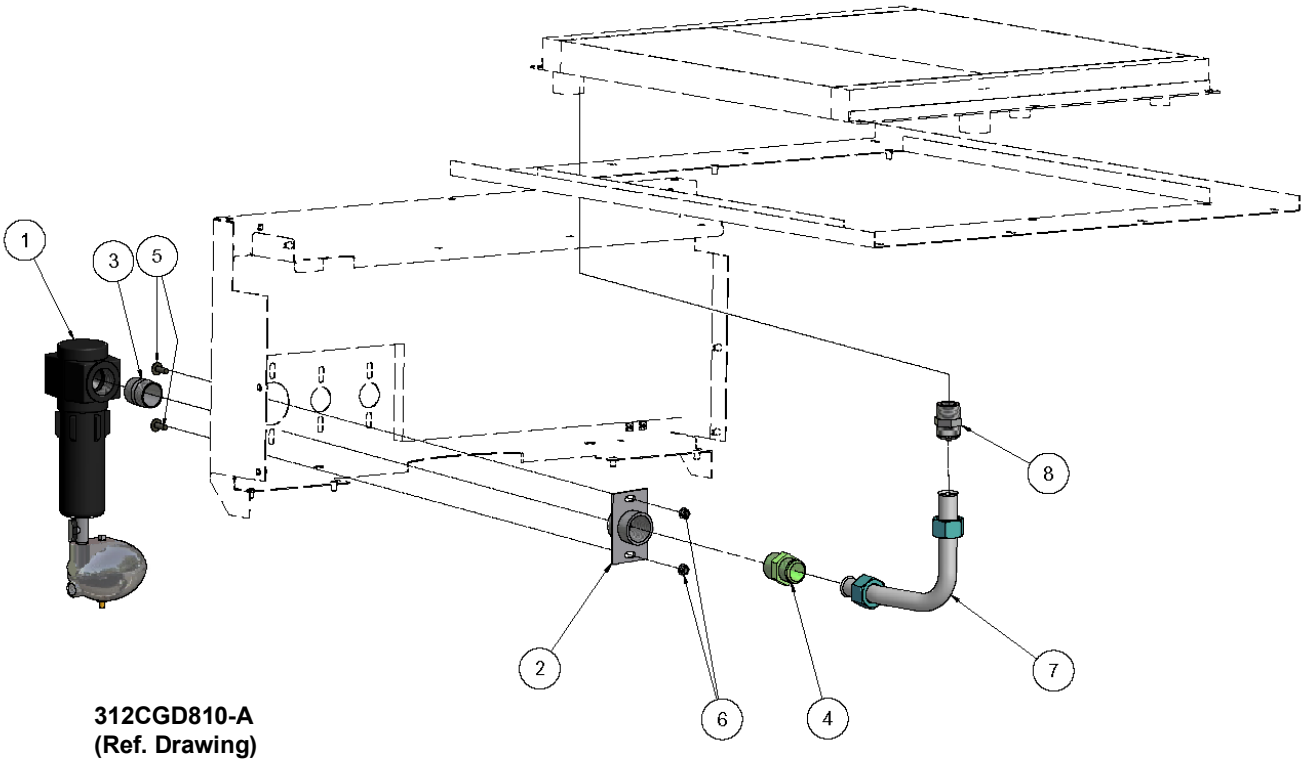

312CGD810-A
(Ref. Drawing)

VS45 DISCHARGE MANIFOLD GROUP

Ref. No.	Name of Part	Qty.	B/M: 307CGD4022 Air-Cooled Part No.	B/M: 309CGD4022 Water-Cooled Part No.
1	WATER SEPARATOR (See page57) ...	1	VP1021702	VP1021702
2	WATER MANIFOLD.....	1	200EDM072	----------
3	NIPPLE.....	1	63AP40G	63AP40G
4	TUBE CONNECTOR.....	1	86H197	----------
5	SCREW	2	75LM51	----------
6	NUT	2	50AW5	----------
7	TUBE WITH FITTING.....	1	20500126	----------
8	TUBE CONNECTOR.....	1	86H140	----------

Order by Part Number and Description. Reference Numbers are for your convenience only.

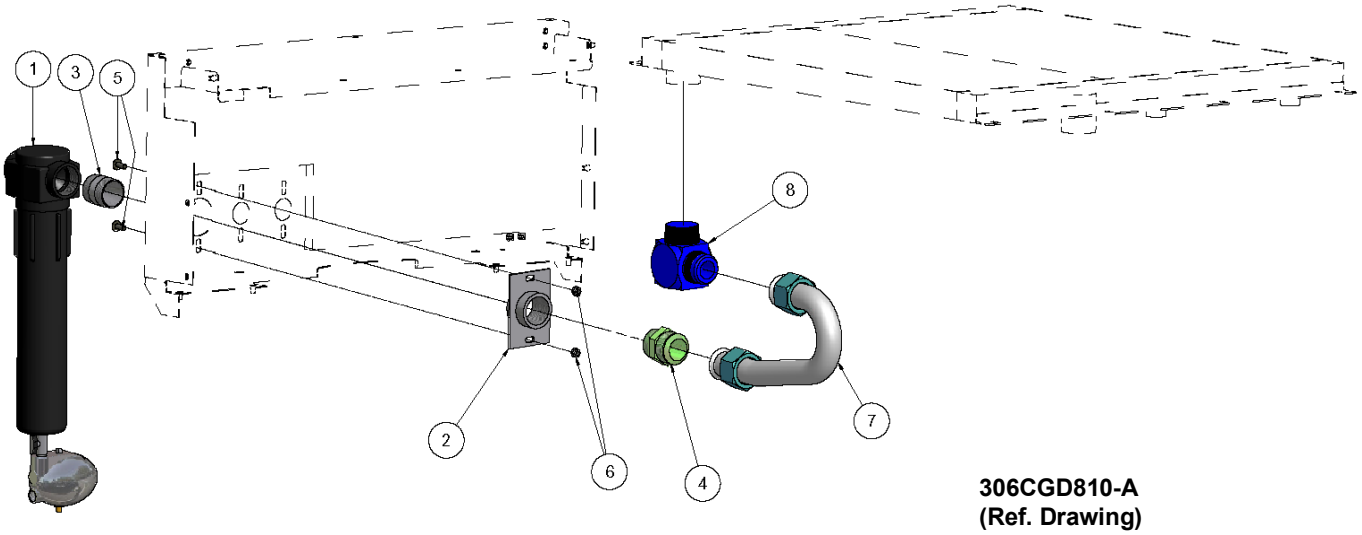

VS50 & 70 DISCHARGE MANIFOLD GROUP

Ref. No.	Name of Part	Qty.	B/M: 306CGD4022 Air-Cooled Part No.	B/M: 308CGD4022 Water-Cooled Part No.
1	WATER SEPARATOR (See page 58) .	1	VP1021703	VP1021703
2	WATER MANIFOLD.....	1	300EHG072	----------
3	NIPPLE.....	1	63L9G	63L9G
4	TUBE CONNECTOR.....	1	86H142	----------
5	SCREW	2	75LM51	----------
6	NUT	2	50AW5	----------
7	TUBE WITH FITTING.....	1	20500123	----------
8	ADAPTOR	1	119446	----------

Order by Part Number and Description. Reference Numbers are for your convenience only.

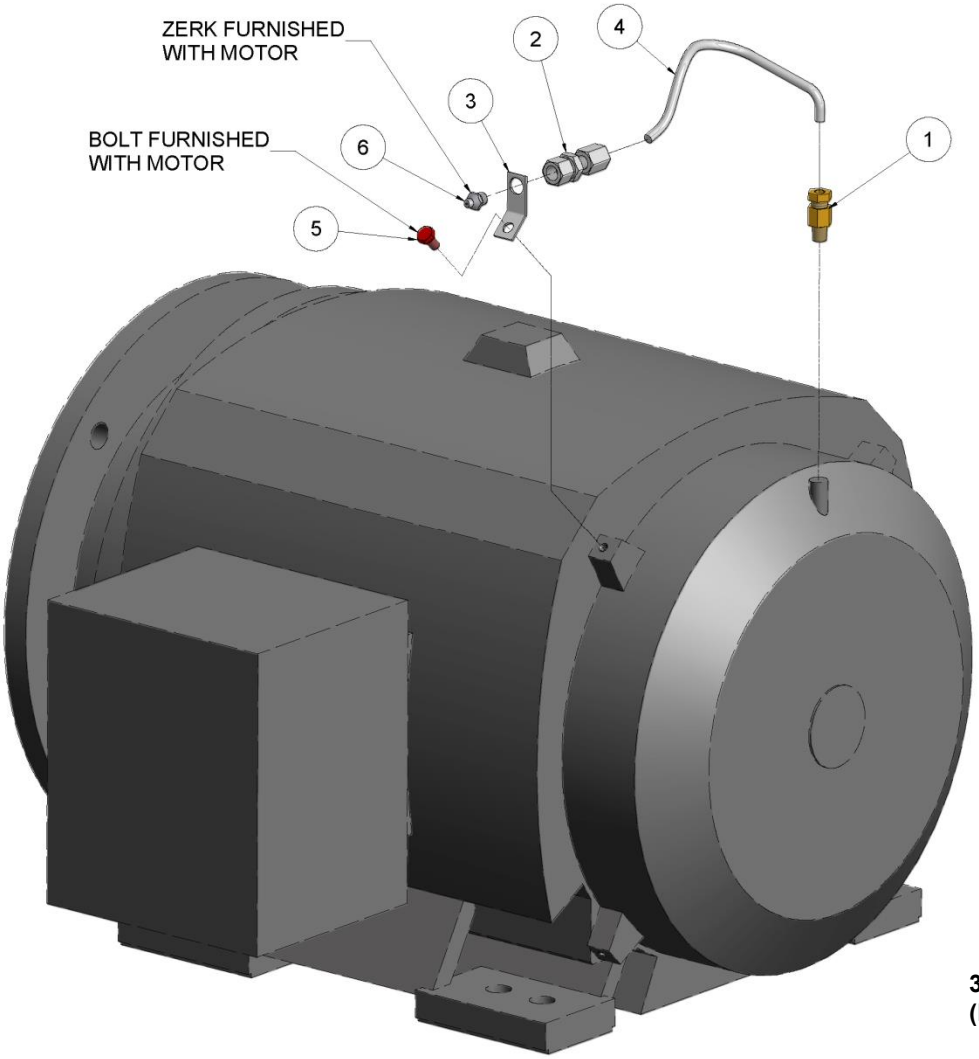

313CGD810-B
(Ref. Drawing)

MOTOR LUBRICATION

Ref. No.	Name of Part	Qty.	B/M: 300CGD4035 Part No.
1	TUBE FITTING	1	86H162
2	TUBE CONNECTOR.....	1	86N287
3	SUPPORT	1	20500122
4	TUBE (IN FEET)	2	85G3
5	SCREW	1	655EC02N
6	FITTING.....	1	40E7

COOLING GROUP – VS45
(AIR-COOLED)

307CGD810-L
(Ref. Drawing)

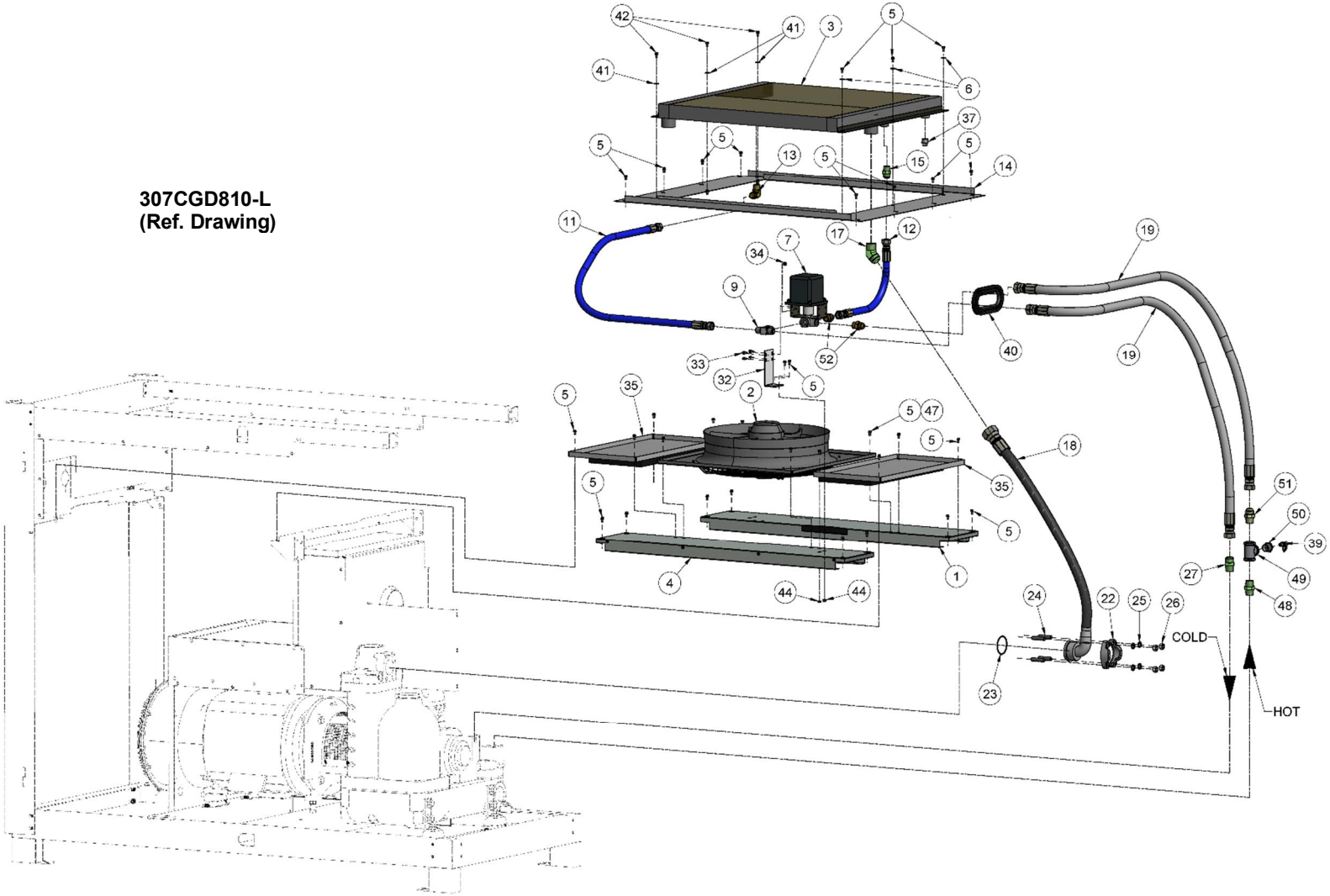

Order by Part Number and Description. Reference Numbers are for your convenience only.

COOLING GROUP – VS45
(AIR-COOLED)

B/M 300CGD4003 303CGD4003; 303 & 307CGD4017; 300CGD4058

Ref. No.	Name of Part	Qty.	Part No.	Ref. No.	Name of Part	Qty.	Part No.
1	COOLER SUPPORT	1	CC1017307	22	CLAMP	1	89733819
2	FAN			23	O-RING	1	2009697
	460V	1	VP1144120	24	STUD	4	79L222
3	OIL COOLER			25	WASHER	4	671HLHR14Z
	STANDARD	1	20500120	26	NUT	4	668RJCA14Z
	SEACOAST	1	VP1011816	27	TUBE CONNECTOR	2	86H150
4	SUPPORT			32	SUPPORT	1	20500116
	LESS DRYER	1	CC1017307	33	SCREW	4	75LM47
	WITH DRYER	1	CC1017308	34	NUT	4	50AW3
5	SCREW	29	75LM47	35	COVER	2	20500104
6	WASHER	3	95A1Z	37	PLUG	1	64AA3G
*7	MIXING VALVE	1	91B259	39	OIL SAMPLING VALVE	1	86N345
9	TEE	2	86H372	40	SEAL (IN FEET)	2	32E18
11	HOSE	1	VP1055389	41	WASHER	3	95A1Z
12	HOSE	1	VP1055390	42	SCREW	3	75LM47
13	ADAPTER	3	29Z241	44	NUT	2	50AW3
14	COOLER SUPPORT	1	20500114	47	ADHESIVE THREAD		
15	TUBE CONNECTOR	1	86H137		LOCK 242 (in oz.)	0.1	25BC725
16	ELBOW	1	64C5G	48	ADAPTOR	1	VP1035384
17	TUBE CONNECTOR	1	86H208	49	TEE	1	64G8G
18	HOSE	1	316CGD127	50	BUSHING	1	143814G
*19	HOSE	2	VP1143442	51	ADAPTOR	1	29Z514
20	TUBE CONNECTOR	1	86H140	52	ADAPTOR	2	86H191

* See Page 63 for Conversion Kit.

COOLING GROUP – VS50 & 70
(AIR-COOLED)

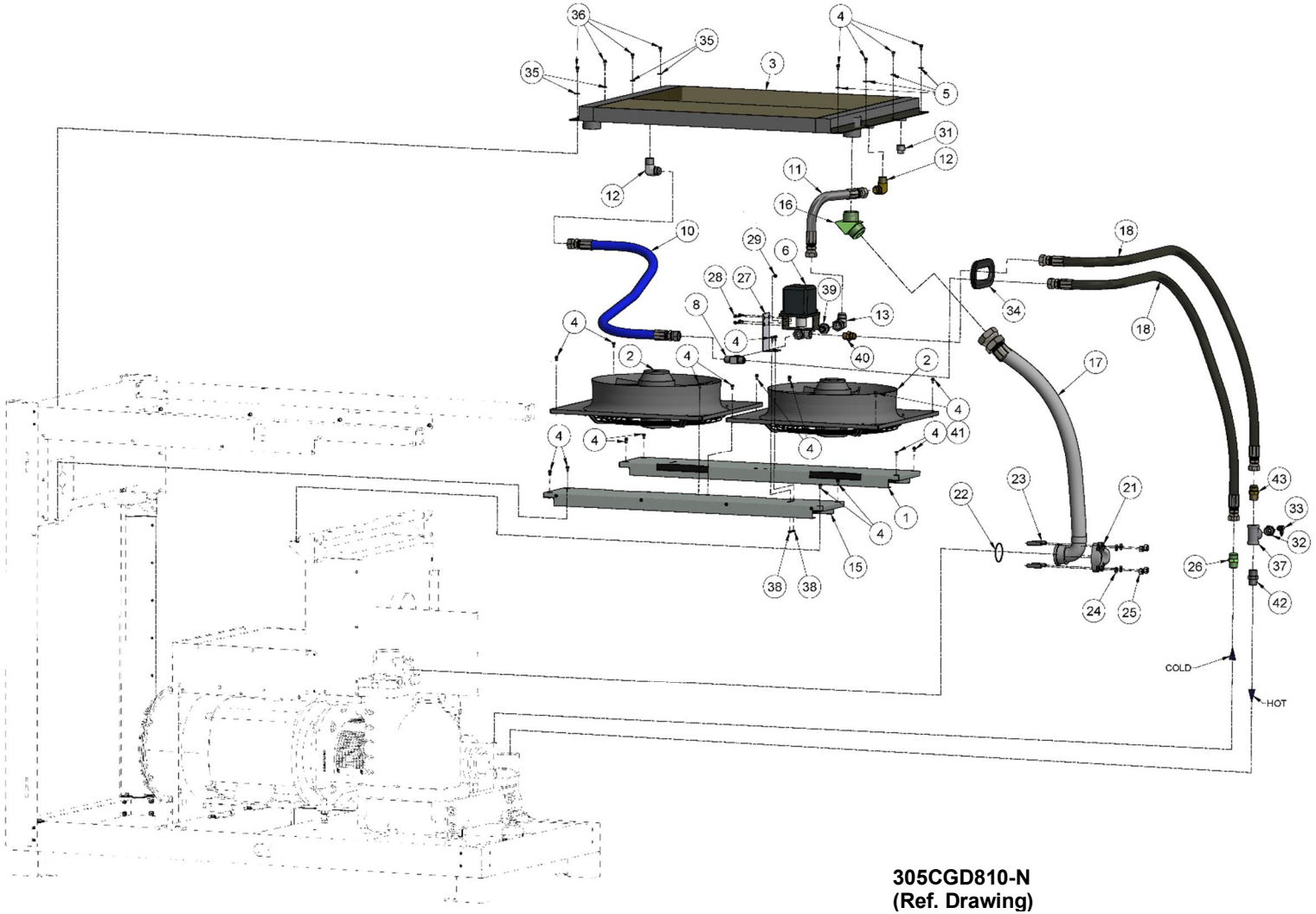

305CGD810-N
(Ref. Drawing)

Order by Part Number and Description. Reference Numbers are for your convenience only.

COOLING GROUP – VS50 & 70
(AIR-COOLED)

B/M: 302 & 304CGD4003; 302 & 306CGD4017; 300 & 302CGD4058

Ref. No.	Name of Part	Qty.	Part No.	Ref. No.	Name of Part	Qty.	Part No.
1	COOLER SUPPORT	1	CC1017305	21	CLAMP	1	89733819
2	FAN			22	O-RING	1	2009697
	460V	2	VP1144120	23	STUD	4	79L222
	575V	2	VP1010964	24	WASHER	4	671HLHR14Z
3	OIL COOLER			25	NUT	4	668RJCA14Z
	STANDARD	1	20500121	26	TUBE CONNECTOR	2	86H150
	SEACOAST	1	VP1011817	27	SUPPORT	1	20500116
4	SCREW	22	75LM47	28	SCREW	4	75LM47
5	WASHER	4	95A1Z	29	NUT	4	50AW3
* 6	MIXING VALVE	1	91B259	31	PLUG	1	64AA1G
8	TEE	1	86H372	32	PIPE BUSHING	1	64E15G
*10	HOSE	1	VP1143443	33	OIL SAMPLING VALVE	1	86N345
11	TUBE WITH FITTING	1	VP1143838	34	SEAL (IN FEET)	2	32E18
12	ADAPTOR	2	29Z244	35	WASHER	4	95A1Z
13	ELBOW	1	64C5G	36	SCREW	4	75LM47
15	SUPPORT			37	TEE	1	64G8G
	LESS DRYER	1	CC1017305	38	NUT	2	50AW3
	WITH DRYER	1	CC1017306	39	ADAPTOR	1	86H371
16	TUBE CONNECTOR	1	86H189	40	ADAPTOR	3	86H191
17	HOSE	1	315CGD127	41	ADHESIVE THREAD LOCK		
18	HOSE	2	VP1055394		242 (in oz.)	0.1	25BC725
19	TUBE CONNECTOR	1	86H142	42	ADAPTOR	1	VP1035384
				43	ADAPTOR	1	29Z214

* See Page 63 for Conversion Kit.

COOLING GROUP – VS45-50
(WATER-COOLED) WITH SHUT-OFF VALVE

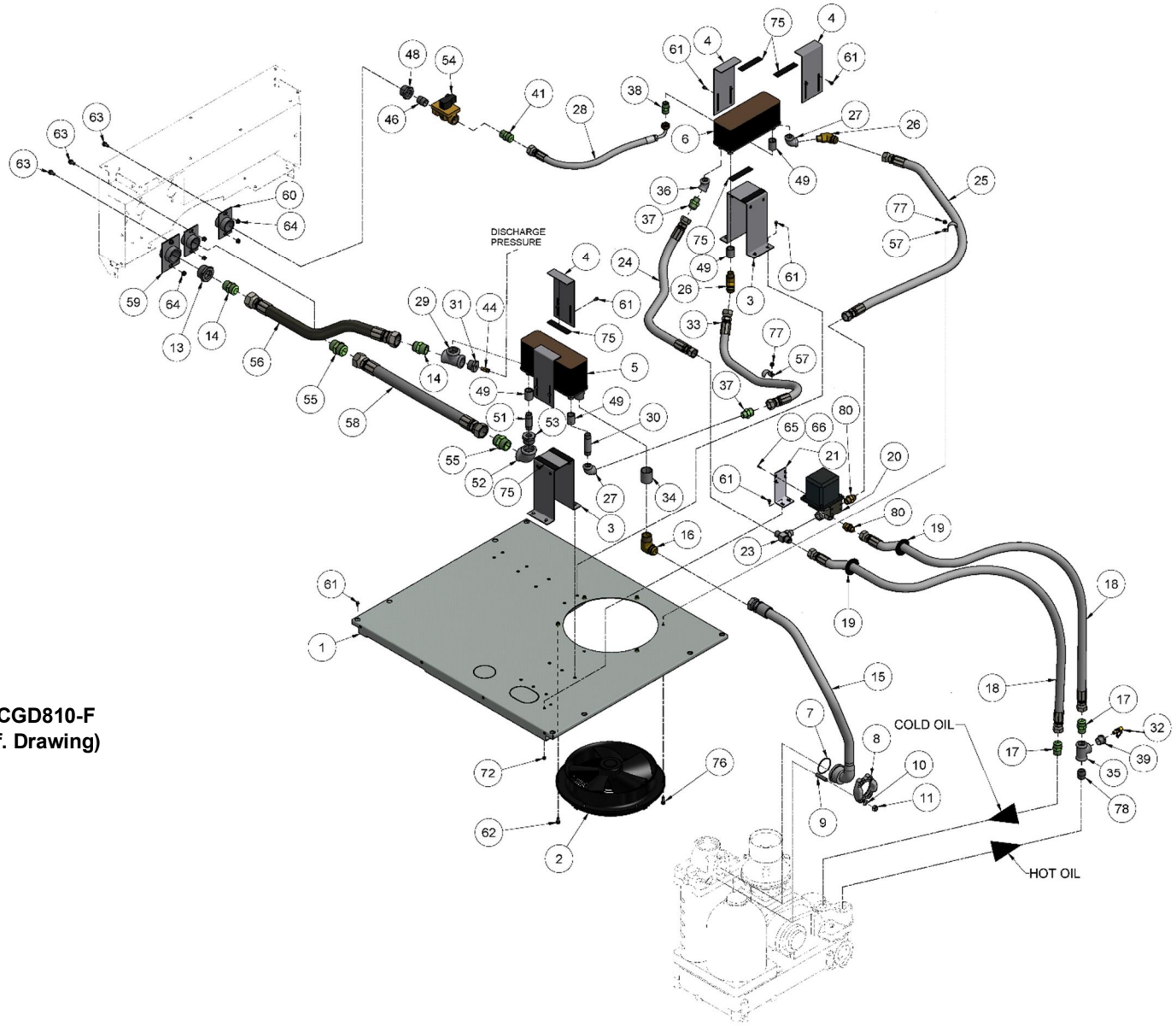

320CGD810-F
(Ref. Drawing)

Order by Part Number and Description. Reference Numbers are for your convenience only.

COOLING GROUP – VS45-50
(WATER-COOLED) WITH SHUT-OFF VALVE

B/M: 307CGD4003
310CGD4003
304 & 305CGD4058

Ref. No.	Name of Part	Qty.	Part No.
1	SUPPORT		
	460V	1	20500137
	575V	1	CC1025194
2	FAN MOTOR		
	460V	1	VP1012290
	575V	1	VP1024771
3	COOLER SUPPORT	2	20500145
4	SUPPORT	4	CC105517
5	AFTERCOOLER	1	VP1012065
6	HEAT EXCHANGER	1	VP1012068
7	O-RING	1	2009697
8	CLAMP	1	89733819
9	STUD	4	79L222
10	WASHER	4	671HLHR14Z
11	NUT	4	668RJCA14Z
*15	HOSE	1	316CGD127
16	ADAPTOR	1	119444
17	TUBE CONNECTOR	2	86H150
18	HOSE	2	VP1143442
19	SEAL (IN FEET)	2	32E18
*20	PRECISION MIXING VALVE	1	91B259
21	SUPPORT	1	20500116
23	ADAPTOR	1	86H372
24	HOSE	1	317CGD127
25	HOSE	1	318CGD127
26	ADAPTOR	2	119368
27	ELBOW	2	64C5G
28	HOSE ASSEMBLY	1	313CGD127
29	TEE	1	64G9G
30	NIPPLE	1	63G6G
31	PIPE BUSHING	1	145246G
32	OIL SAMPLING VALVE	1	86N345
33	HOSE	1	312CGD127
34	COUPLING	1	64BK7G
35	TEE	1	64G8G
36	ELBOW	1	64V5G
37	TUBE CONNECTOR	2	86H183
38	TUBE CONNECTOR	1	86H137
39	PIPE BUSHING	1	143814G
41	TUBE CONNECTOR	1	86H138
44	TUBE FITTING	1	86E210
46	NIPPLE	1	63H1G
48	PIPE BUSHING	1	64EB303G
49	COUPLING	4	64BK5G
51	NIPPLE	1	63G4G
52	ELBOW	1	64C8G
53	PIPE BUSHING	1	64E117G
54	CONTROL VALVE	1	90AR1155
55	TUBE CONNECTOR	2	86H141
56	HOSE	1	VP1029917
57	CLAMP	2	98H7
58	HOSE	1	309CGD127
60	WATER MANIFOLD	2	200EDM072
61	SCREW	26	75LM48
62	SCREW		
	460V	4	75LM50
	575V	2	75LM48
63	SCREW	6	75LM51
64	NUT	6	50AW5
65	SCREW	4	75LM269
66	NUT	4	50K12
72	NUT	2	50AW3
75	SEAL	4	32E24
76	SCREW		
	460V	2	75LM97
	575V	2	75LM53
77	NUT	2	50AW4
78	ADAPTOR	1	VP1035384
80	ADAPTOR	2	86H191

* See Page 63 for Conversion Kit.

COOLING GROUP – VS70
(WATER-COOLED) WITH SHUT-OFF VALVE

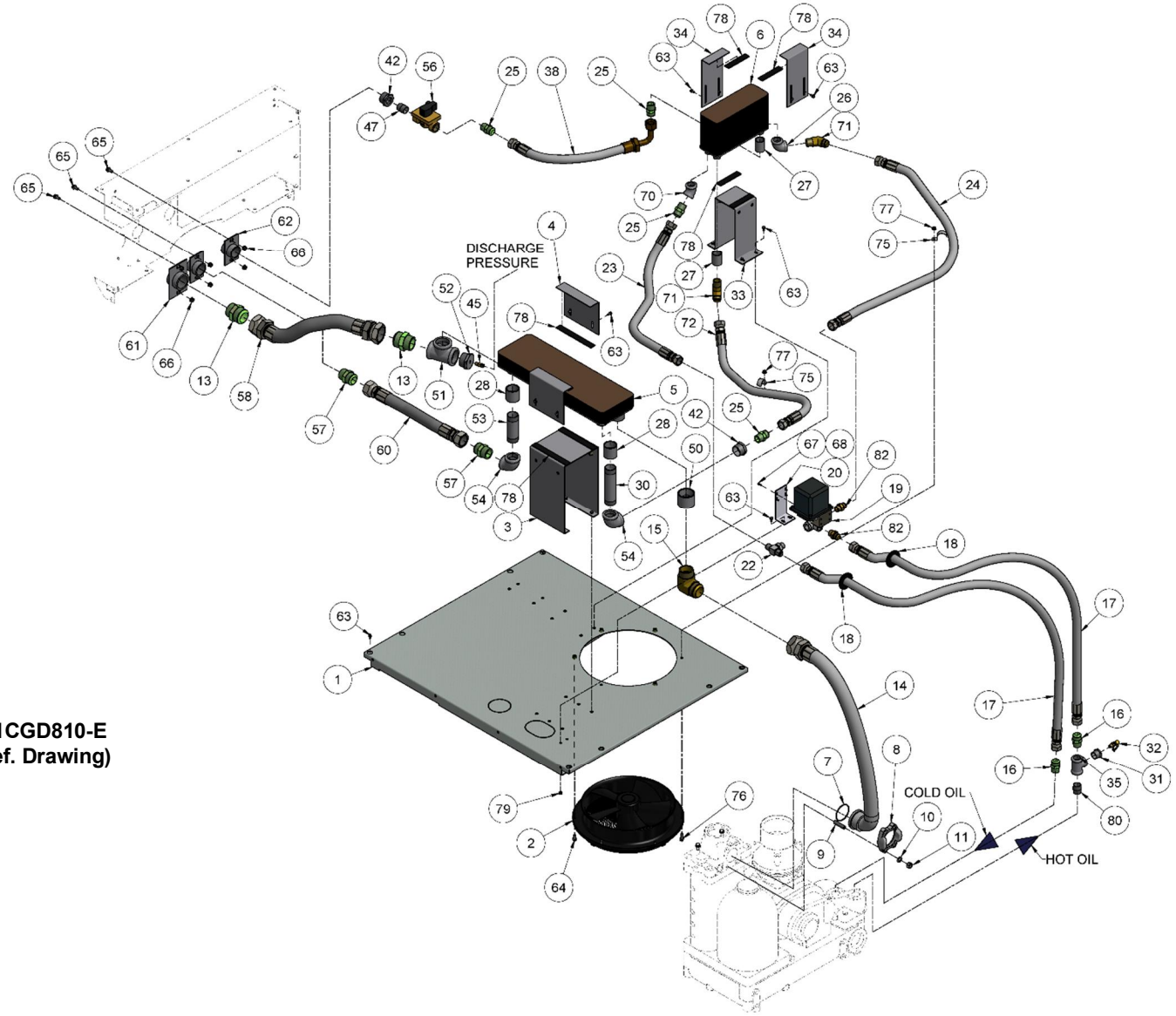

321CGD810-E
(Ref. Drawing)

Order by Part Number and Description. Reference Numbers are for your convenience only.

COOLING GROUP – VS70
(WATER-COOLED) WITH SHUT-OFF VALVE

B/M: 308CGD4003
309CGD4003
301 & 303CGD4058

Ref. No.	Name of Part	Qty.	Part No.
1	SUPPORT		
	460V	1	20500137
	575V	1	CC1025194
2	FAN MOTOR		
	460V	1	VP1012290
	575V	1	VP1024771
3	SUPPORT	1	20500144
4	SUPPORT	2	CC1015519
5	AFTERCOOLER	1	VP1012066
6	HEAT EXCHANGER	1	VP1012069
7	O-RING	1	2009697
8	CLAMP	1	87733819
9	STUD	4	79L222
10	WASHER	4	671HLHR14Z
11	NUT	4	668RJCA14Z
* 14	HOSE ASSEMBLY	1	315CGD127
15	ADAPTOR	1	119446
16	TUBE CONNECTOR	2	86H150
17	HOSE ASSEMBLY	2	VP1143442
18	GROMMET	2	32E18
* 19	PRECISION MIXING VALVE	1	91B259
20	SUPPORT	1	20500116
21	NIPPLE	1	63G1G
22	ADAPTOR	1	86H372
23	HOSE ASSEMBLY	1	317CGD127
24	HOSE ASSEMBLY	1	318CGD127
25	TUBE CONNECTOR	4	86H138
26	ELBOW	1	64C6G
27	COUPLING	2	64BK6G
28	COUPLING	2	64BK8G
30	NIPPLE	1	63K9G
31	PIPE BUSHING	1	143814G
32	OIL SAMPLING VALVE	1	86N345
33	SUPPORT	1	20500145
34	SUPPORT	2	CC1015517
35	TEE	1	64G8G
38	HOSE ASSEMBLY	1	314CGD127
42	PIPE BUSHING	2	64E13G
45	TUBE FITTING	1	86E210
47	NIPPLE	1	63H1G
50	COUPLING	1	64BK9G
51	TEE	1	64G1G
52	PIPE BUSHING	1	64E60G
53	NIPPLE	1	63K6G
54	ELBOW	2	64C8G
56	CONTROL VALVE	1	90AR1155
57	TUBE CONNECTOR	2	86H141
58	HOSE ASSEMBLY	1	306CGD127
60	HOSE ASSEMBLY	1	308CGD127
61	WATER MANIFOLD	1	300EHG072
62	WATER MANIFOLD	2	200EDM072
63	SCREW	26	75LM48
64	SCREW		
	460V	4	75LM50
	575V	2	75LM48
65	SCREW	6	75LM51
66	NUT	6	50AW5
67	SCREW	4	75LM269
68	NUT	4	50K12
70	ELBOW	1	64V6G
71	ADAPTOR	2	29Z202
72	HOSE ASSEMBLY	1	312CGD127
75	CLAMP	2	98H7
76	SCREW		
	460V	2	75LM97
	575V	2	75LM53
77	NUT	2	50AW4
78	SEAL	4	32E24
79	NUT	2	50AW3
80	ADAPTOR	1	VP1035384
82	ADAPTOR	2	86H191

* See Page 63 for Conversion Kit.

COOLING GROUP – VS45-50
(WATER-COOLED) WITH TEMP REGULATOR & SHUT-OFF VALVE

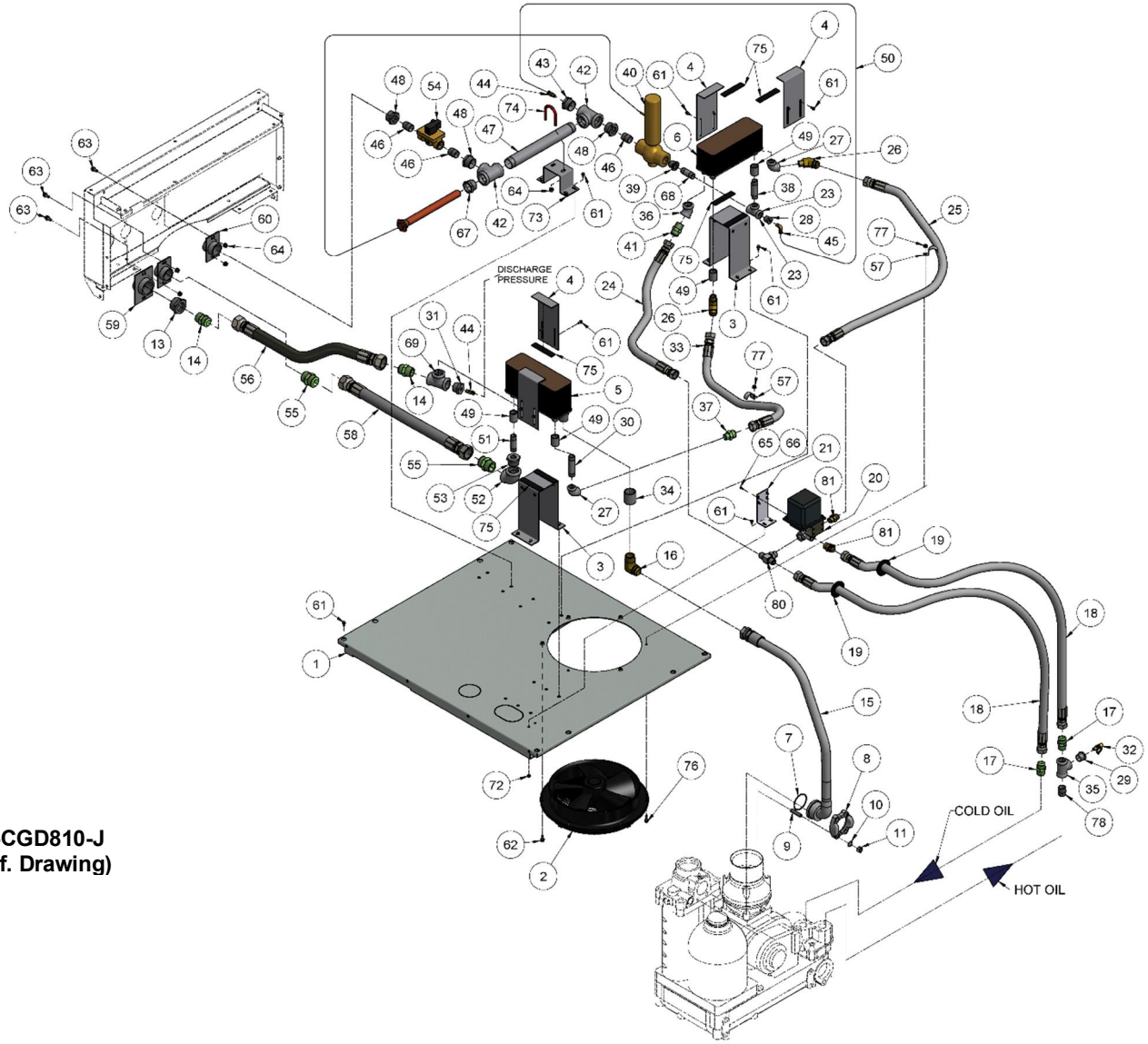

315CGD810-J
(Ref. Drawing)

Order by Part Number and Description. Reference Numbers are for your convenience only.

COOLING GROUP – VS45 &-50
(WATER-COOLED) WITH TEMP REGULATOR & SHUT-OFF VALVE

B/M: 306CGD4003
310CGD4003
304 & 305CGD4058

Ref. No.	Name of Part	Qty.	Part No.
1	SUPPORT		
	460V	1	20500137
	575V	1	CC1025194
2	FAN MOTOR		
	460V	1	VP1012290
	575V	1	VP1024771
3	COOLER SUPPORT	2	20500145
4	SUPPORT	4	CC1015517
5	AFTERCOOLER	1	VP1012065
6	HEAT EXCHANGER	1	VP1012068
7	O-RING	1	2009697
8	CLAMP	1	87733819
9	STUD	4	79L222
10	WASHER	4	671HLHR14Z
11	NUT	4	668RJCA14Z
15	HOSE	1	316CGD127
16	ADAPTOR	1	119444
17	TUBE CONNECTOR	2	86H150
18	HOSE	2	VP1055394
19	SEAL (IN FEET)	2	32E18
* 20	PRECISION MIXING VALVE	1	91B259
21	SUPPORT	1	20500116
23	TEE	2	64G7G
24	HOSE	1	317CGD127
25	HOSE	1	318CGD127
26	ADAPTOR	2	119368
27	ELBOW	3	64C5G
28	PIPE BUSHING	1	64E3G
29	PIPE BUSHING	1	143814G
30	NIPPLE	1	63G6G
31	PIPE BUSHING	1	145246G
32	OIL SAMPLING VALVE	1	86N345
33	HOSE	1	312CGD127
34	COUPLING	1	64BK7G
35	TEE	1	64G8G
36	ELBOW	1	64V6G
37	TUBE CONNECTOR	1	86H183
38	NIPPLE	1	63G5G
39	PIPE BUSHING	1	64E16G
40	REGULATOR	1	90AR1154
41	TUBE CONNECTOR	1	86H138
42	TEE	2	64G11G
43	PIPE BUSHING	1	64E39G
44	TUBE FITTING	2	86E210
45	TUBE FITTING	1	86E220
46	NIPPLE	3	63H1G
47	NIPPLE	1	63AP52G
48	PIPE BUSHING	3	64EB303G
49	COUPLING	4	64BK5G
50	TUBE (IN FEET)	2	85G3
51	NIPPLE	1	63G4G
52	ELBOW	1	64C8G
53	PIPE BUSHING	1	64E117G
54	CONTROL VALVE	1	90AR1155
55	TUBE CONNECTOR	2	86H141
56	HOSE	1	VP1029917
57	CLAMP	2	98H7
58	HOSE	1	309CGD127
59	MANIFOLD	1	300EHG072
60	WATER MANIFOLD	2	200EDM072
62	SCREW		
	460V	4	75LM50
	575V	2	75LM48
63	SCREW	6	75LM51
64	NUT	8	50AW5
65	SCREW	4	75LM269
66	NUT	4	50K12
67	PIPE BUSHING	1	64E98G
68	NIPPLE	1	63G3G
69	TEE	1	64G9G
72	NUT	2	50AW3
73	DISCHARGE PIPE	1	CC1015520
74	BOLT	1	15U58
75	SEAL	4	32E24
76	SCREW		
	460V	2	75LM97
	575V	2	75LM53
77	NUT	2	50AW4
78	ADAPTOR	1	VP1035384
80	ADAPTOR	2	86H372

* See Page 63 for Conversion Kit.

COOLING GROUP – VS70
(WATER-COOLED) WITH TEMP REGULATOR & SHUT-OFF VALVE

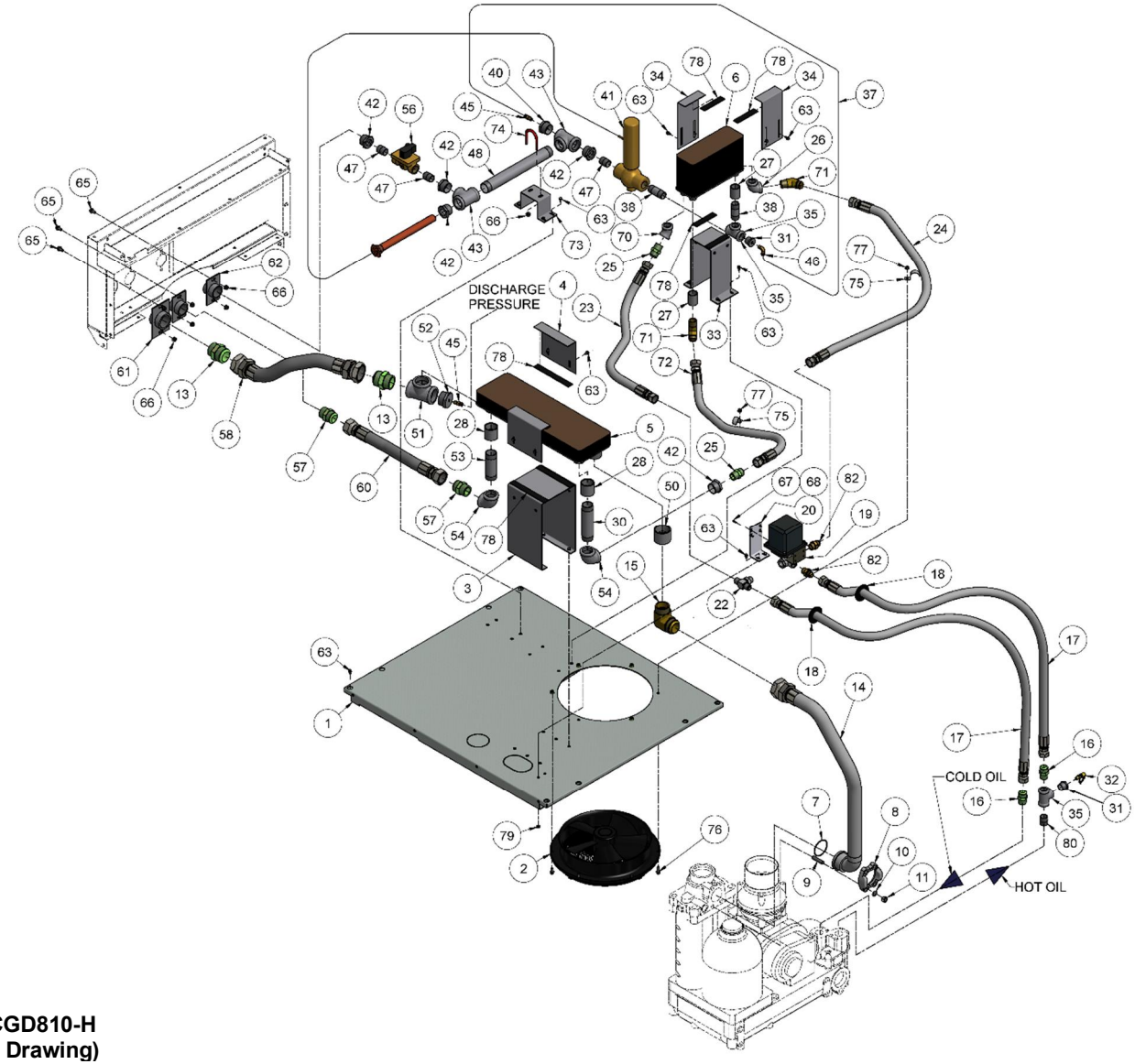

314CGD810-H
(Ref. Drawing)

Order by Part Number and Description. Reference Numbers are for your convenience only.

COOLING GROUP – VS70
(WATER-COOLED) WITH TEMP REGULATOR & SHUT-OFF VALVE

B/M: 305CGD4003
309CGD4003
301 & 303CGD4058

Ref. No.	Name of Part	Qty.	Part No.
1	SUPPORT		
	460V	1	20500137
	575V	1	CC1025194
2	FAN MOTOR		
	460V	1	VP1012290
	575V	1	VP1024771
3	SUPPORT	1	20500144
4	SUPPORT	2	CC1015519
5	AFTERCOOLER	1	VP1012066
6	HEAT EXCHANGER	1	VP1012069
7	O-RING	1	2009697
8	CLAMP	1	87733819
9	STUD	4	79L222
10	WASHER	4	671HLHR14Z
11	NUT	4	668RJCA14Z
*14	HOSE	1	315CGD127
15	ADAPTOR	1	119446
16	TUBE CONNECTOR	2	86H150
17	HOSE	2	VP1143442
18	SEAL (IN FEET)	2	32E18
*19	PRECISION MIXING VALVE	1	91B259
20	SUPPORT	1	20500116
22	ADAPTOR	1	86H372
23	HOSE	1	317CGD127
24	HOSE	1	318CGD127
25	TUBE CONNECTOR	2	86H138
26	ELBOW	1	64C6G
27	COUPLING	2	64BK6
28	COUPLING	2	64BK8G
30	NIPPLE	1	63K9G
31	PIPE BUSHING	2	143814G
32	OIL SAMPLING VALVE	1	86N345
33	SUPPORT	1	20500145
34	SUPPORT	2	CC1015517
35	TEE	2	64G8G
37	TUBE (IN FEET)	2	85G3
38	NIPPLE	1	63H4G
40	PIPE BUSHING	1	64E39G
41	REGULATOR	1	90AR1154
42	PIPE BUSHING	5	64E13G
43	TEE	2	64G11G
45	TUBE FITTING	2	86E210
46	TUBE FITTING	1	86E220
47	NIPPLE	3	63H1G
48	NIPPLE	1	63AP52G
50	COUPLING	1	64BK9G
51	TEE	1	64G1G
52	PIPE BUSHING	1	64E60G
53	NIPPLE	1	63K6G
54	ELBOW	2	64C8G
56	CONTROL VALVE	1	90AR1155
57	TUBE CONNECTOR	2	86H141
58	HOSE	1	306CGD127
60	HOSE	1	308CGD127
61	WATER MANIFOLD	1	300EHG072
62	WATER MANIFOLD	2	200EDM072
64	SCREW		
	460V	4	75LM50
	575V	2	75LM48
65	SCREW	6	75LM51
66	NUT	8	50AW5
67	SCREW	4	75LM269
68	NUT	4	50K12
70	ELBOW	1	64V6G
71	ADAPTOR	2	29Z202
72	HOSE	1	312CGD127
73	DISCHARGE PIPE	1	CC1015520
74	BOLT	1	15U58
75	CLAMP	2	98H7
76	SCREW		
	460V	2	75LM97
	575V	2	75LM53
77	NUT	2	50AW4
78	SEAL	4	32E24
79	NUT	2	50AW3
80	ADAPTOR	1	VP1035384
82	ADAPTOR	2	86H191

* See Page 63 for Conversion Kit.

CONTROL TUBING GROUP – VS45

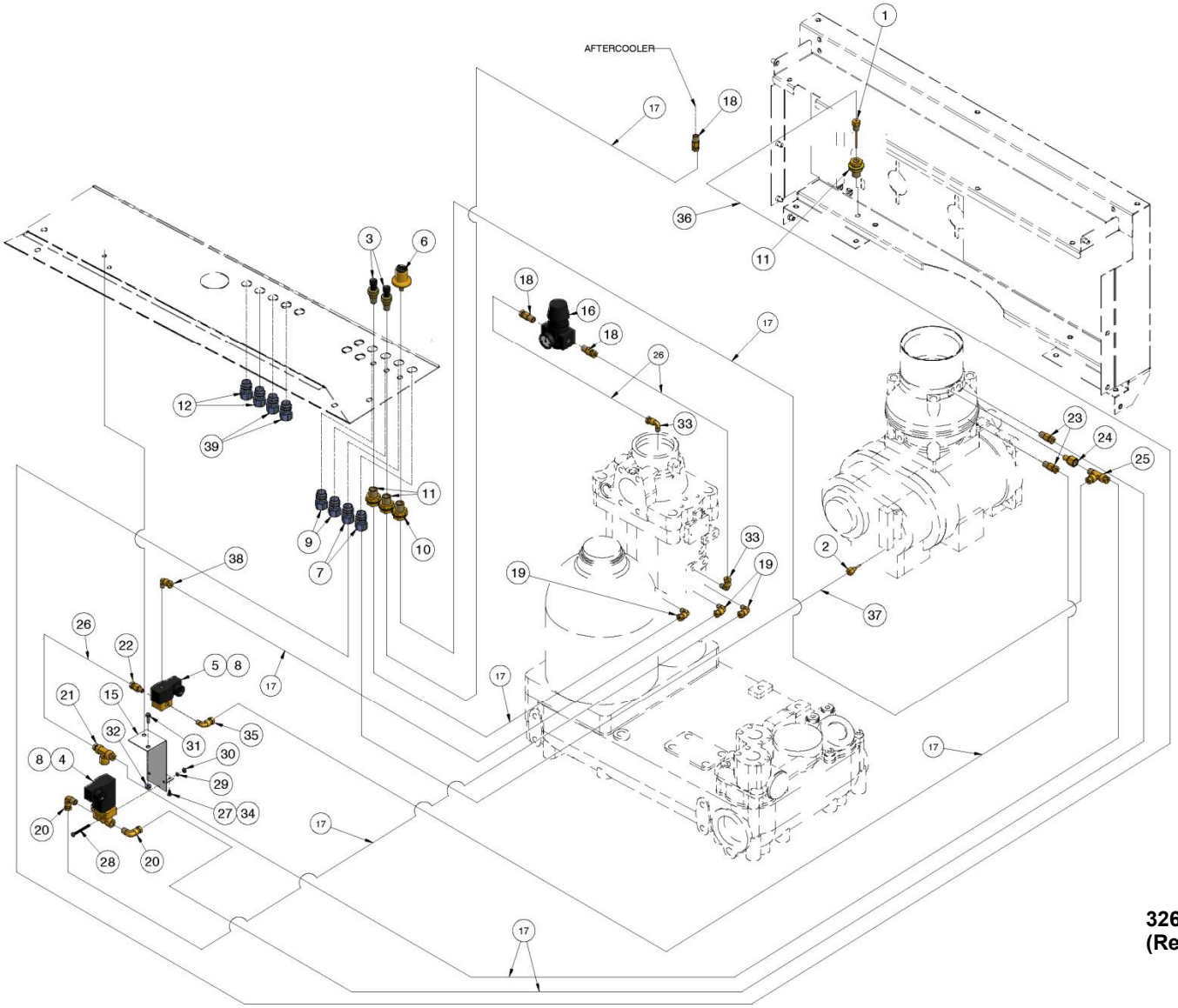

326CGD810-A
(Ref. Drawing)

Order by Part Number and Description. Reference Numbers are for your convenience only

CONTROL TUBING GROUP – VS45

Ref. No.	Name of Part	Qty.	Part No.	Ref. No.	Name of Part	Qty.	B/M 302CGD4002 304CGD4002 Part No.
* 1	THERMISTOR PROBE	1	VP1018671	20	TUBE FITTING	2	86E220
* 2	THERMISTOR PROBE	1	VP1020738	21	TUBE FITTING	1	86E240
* 3	PRESSURE TRANSDUCER	2	VP1011577	22	TUBE FITTING	1	86E209
* 4	SOLENOID VALVE	1	91B234	23	TUBE FITTING	2	86H166
* 5	SOLENOID VALVE	1	91B235	24	ADAPTOR	1	86H175
* 6	VACUUM SWITCH	1	88H195	25	TUBE FITTING	1	86E236
7	ELECTRICAL FITTING	2	24CA2865	26	TUBE (IN FEET)	2	85G3
* 8	CORD	2	VP1010781	27	SCREW	4	75G71
9	ELECTRICAL FITTING	2	24CA2865	28	SCREW	2	75G34
10	TUBE CONNECTOR	1	86N287	29	LOCKWASHER	2	95B13
11	CONNECTOR	3	86E250	30	NUT	2	50K1
12	ELECTRICAL FITTING	2	24CA615	31	SCREW	2	75LM269
13	WIRE (IN FEET) (not shown)	6	97J77	32	NUT	2	50AW2
14	TERMINAL LUG (not shown)	4	24CA518	33	TUBE FITTING	2	86H160
15	SUPPORT	1	20500115	34	WASHER	4	42140300
**16	PRESSURE REGULATOR W/ GAUGE	1	88H367	35	TUBE FITTING	1	86E219
17	TUBE (IN FEET)	30	85G3	* 36	ELECTRICAL CORD (30 FT)	1	VP1018672
18	TUBE FITTING	3	86E210	* 37	ELECTRICAL CORD (8 FT)	1	VP1018675
19	TUBE FITTING	3	86H163	38	TUBE FITTING	1	86E229
				39	ELECTRICAL FITTING	2	24CA610

* Parts included in Electrical Control Kit Part Number 301CGD6013. Refer to page 60.

** Parts included in Pneumatic Control Kit Part Number 308CGD6013. Refer to page 59.

CONTROL TUBING GROUP – VS50 & VS70

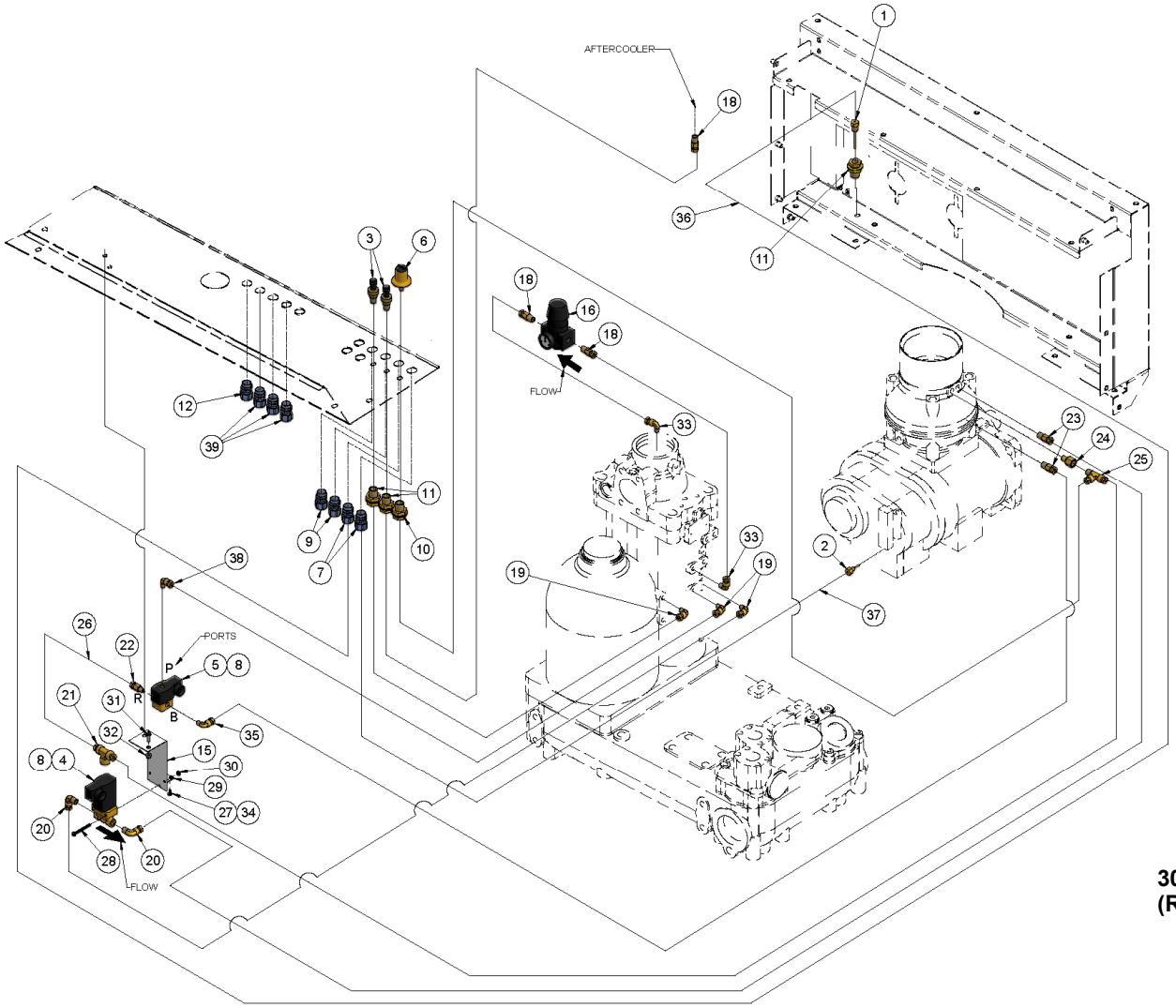

309CGD810-L
(Ref. Drawing)

Order by Part Number and Description. Reference Numbers are for your convenience only

CONTROL TUBING GROUP – VS50 & VS70

B/M: 302 & 303CGD4002

Ref. No.	Name of Part	Qty.	Part No.	Ref. No.	Name of Part	Qty.	Part No.
* 1	THERMISTOR PROBE	1	VP1018671	20	TUBE FITTING	2	86E220
* 2	THERMISTOR PROBE	1	VP1020738	21	TUBE FITTING	1	86E240
* 3	PRESSURE TRANSDUCER	2	VP1011577	22	TUBE FITTING	1	86E209
* 4	SOLENOID VALVE	1	91B234	23	TUBE FITTING	2	86H166
* 5	SOLENOID VALVE	1	91B235	24	ADAPTOR	1	86H175
* 6	VACUUM SWITCH	1	88H195	25	TUBE FITTING	1	86E236
7	ELECTRICAL FITTING	2	24CA2865	26	TUBE (IN FEET)	2	85G3
* 8	CORD			27	SCREW	4	75G71
	VS50	2	VP1010781	28	SCREW	2	75G34
	VS70	2	VP1142313	29	LOCKWASHER	2	95B13
9	ELECTRICAL FITTING	2	24CA2865	30	NUT	2	50K1
10	TUBE CONNECTOR	1	86N287	31	SCREW	2	75LM269
11	CONNECTOR	3	86E250	32	NUT	2	50AW2
12	ELECTRICAL FITTING	1	24CA615	33	TUBE FITTING	2	86H160
13	WIRE (IN FEET) (not shown)	6	97J77	34	WASHER	4	42140300
14	TERMINAL LUG (not shown)	4	24CA518	35	TUBE FITTING	1	86E219
15	SUPPORT	1	20500115	* 36	ELECTRICAL CORD (30 FT)	1	VP1018672
**16	PRESSURE REGULATOR W/ GAUGE	1	88H367	* 37	ELECTRICAL CORD (8 FT)	1	VP1018675
17	TUBE (IN FEET)	30	85G3	38	TUBE FITTING	1	86E229
18	TUBE FITTING	3	86E210	39	ELECTRICAL FITTING	3	24CA610
19	TUBE FITTING	3	86H163				

* Parts included in Electrical Control Kit Part Number 301CGD6013. Refer to page 60.
Repair part for VP1142313 is VP1010781.

** Parts included in Pneumatic Control Kit Part Number 308CGD6013. Refer to page 59.

DRYER ASSEMBLY
AIR-COOLED VS45

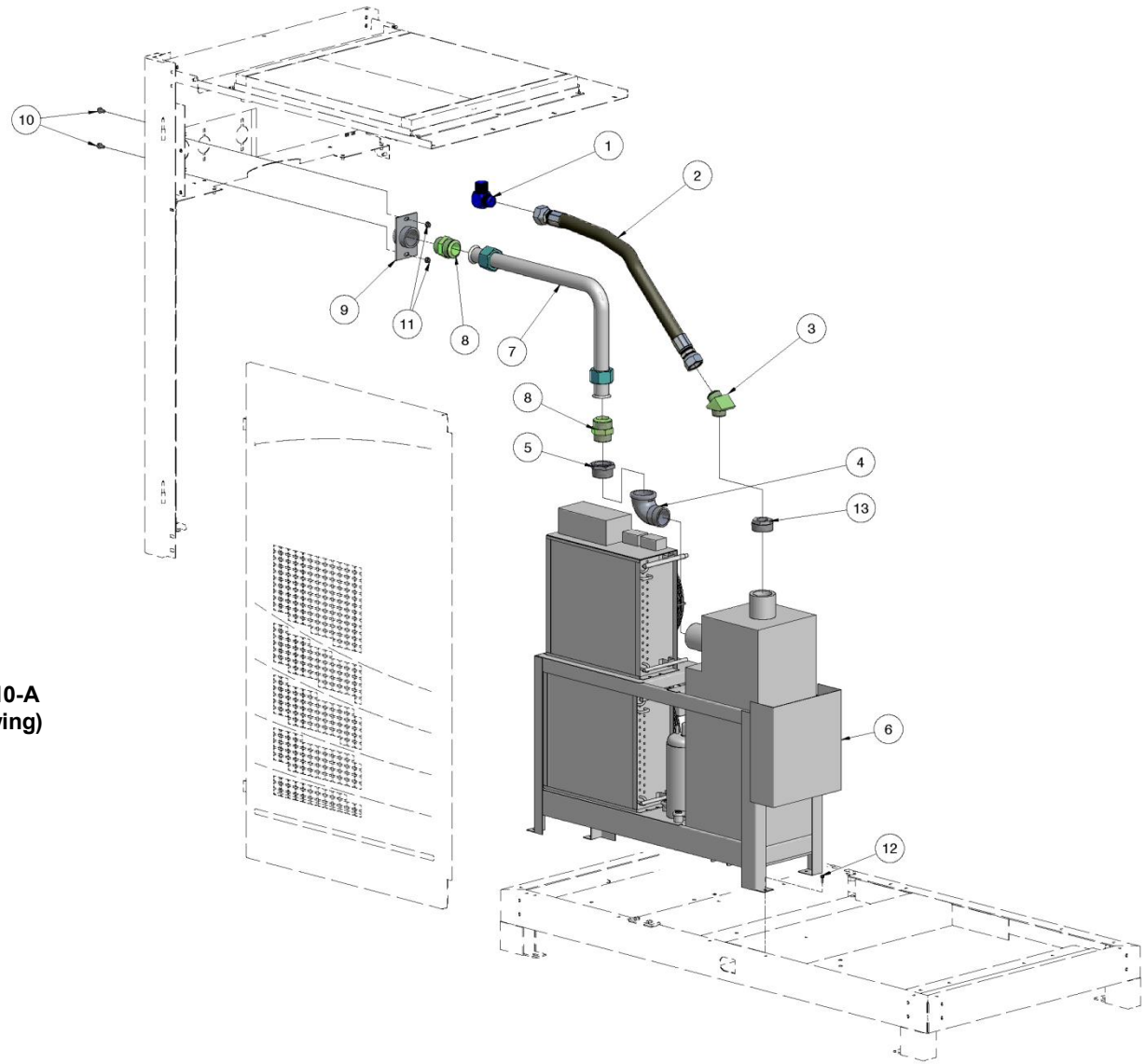

322CGD810-A
(Ref. Drawing)

Order by Part Number and Description. Reference Numbers are for your convenience only

DRYER ASSEMBLY
AIR-COOLED VS45

B/M: 314CGD4023

Ref. No.	Name of Part	Qty.	Part No.
1	ADAPTOR	1	119444
2	HOSE	1	VP1024006
3	TUBE CONNECTOR	1	86H208
4	ELBOW	1	64D13G
5	PIPE BUSHING	1	64E25G
6	AIR DRYER	1	VP1026480
7	HOSE	1	20500127
8	TUBE CONNECTOR	2	86H142
9	WATER MANIFOLD	1	300EHG072
10	SCREW	2	75LM51
11	NUT	2	50AW5
12	SCREW	4	75LM48
13	PIPE BUSHING	1	64E48G
14	CORD (7 METERS)	1	VP1010780

DRYER ASSEMBLY
AIR-COOLED VS50 & 70

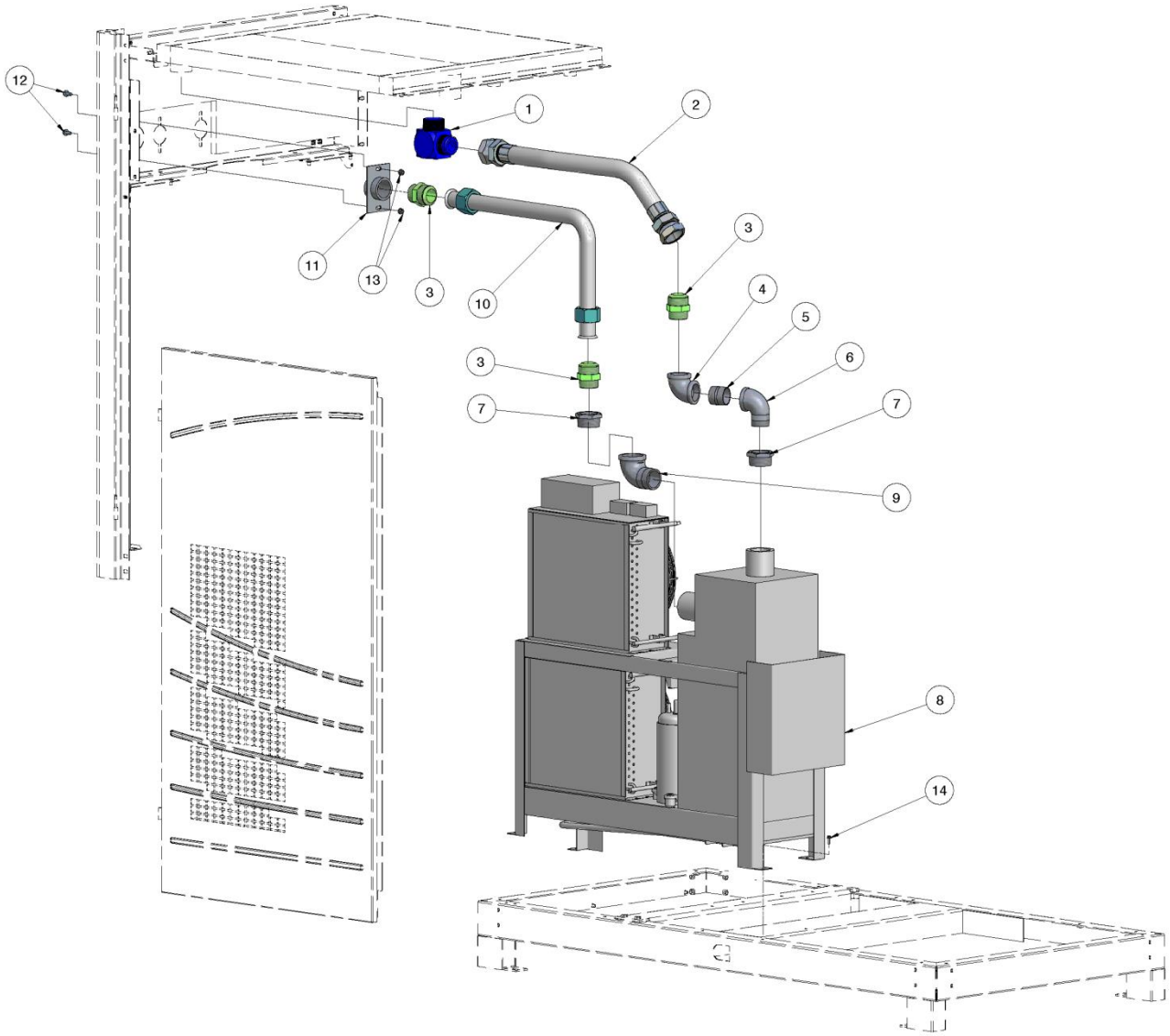

323CGD810-A
(Ref. Drawing)

Order by Part Number and Description. Reference Numbers are for your convenience only.

DRYER ASSEMBLY
AIR-COOLED VS50 & 70

B/M: 315CGD4023

Ref. No.	Name of Part	Qty.	Part No.
1	ADAPTOR	1	119446
2	HOSE	1	300CGD127
3	TUBE CONNECTOR	3	86H142
4	ELBOW	1	64C9G
5	PIPE NIPPLE	1	63L2G
6	ELBOW	1	64D9G
7	PIPE BUSHING	2	64E25G
8	AIR DRYER	1	VP1026480
9	ELBOW	1	64D13G
10	HOSE	1	20500127
11	WATER MANIFOLD	1	300EHG072
12	SCREW	2	75LM51
13	NUT	2	50AW5
14	SCREW	4	75LM48
15	CORD (7 METERS)	1	VP1010780

DRYER ASSEMBLY
WATER-COOLED VS45 & 50

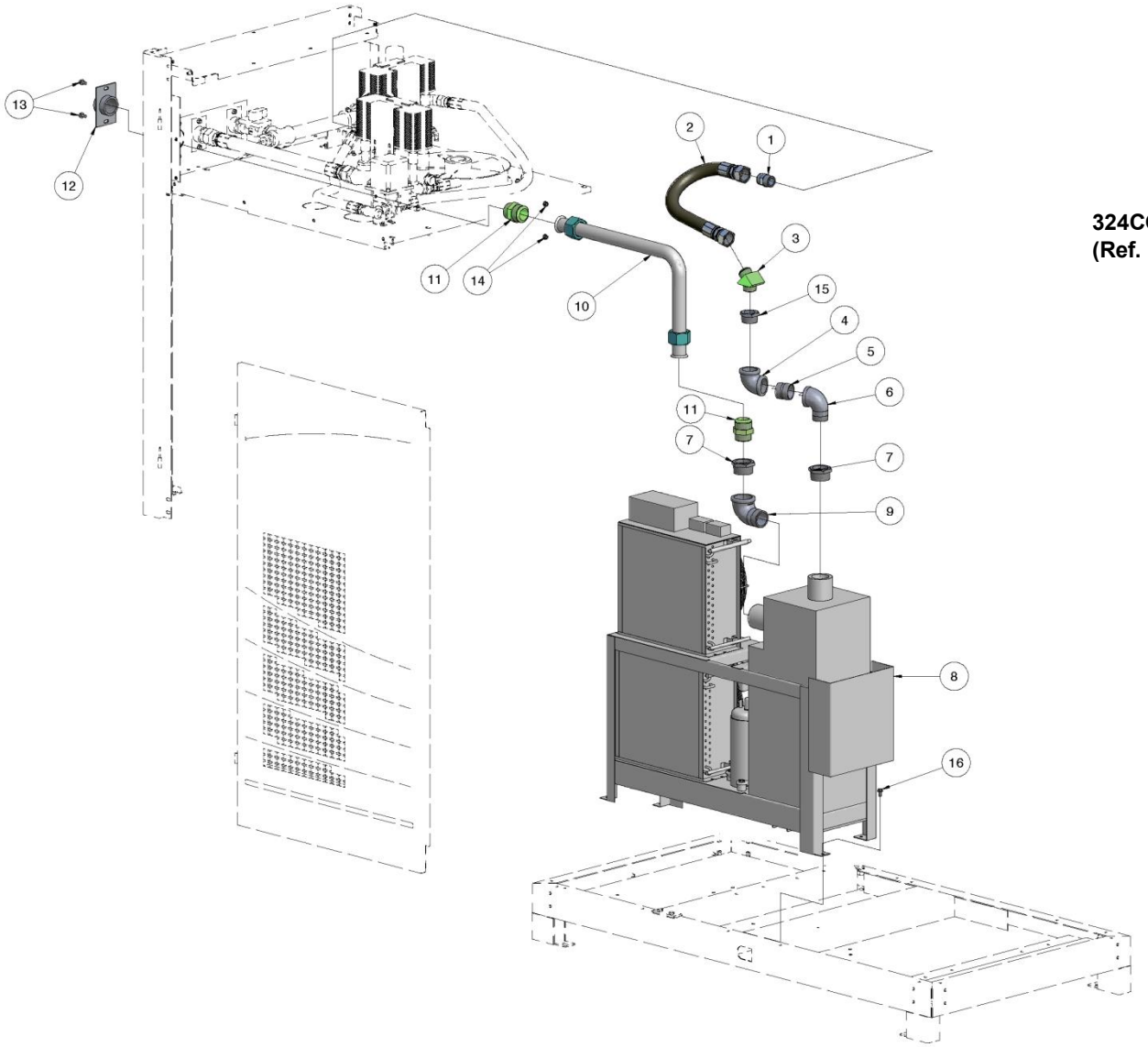

324CGD810-A
(Ref. Drawing)

Order by Part Number and Description. Reference Numbers are for your convenience only

DRYER ASSEMBLY
WATER-COOLED VS45 & 50

B/M: 316CGD4023

Ref. No.	Name of Part	Qty.	Part No.
1	TUBE CONNECTOR	1	86H140
2	HOSE	1	301CGD127
3	TUBE CONNECTOR	1	86H208
4	ELBOW	1	64C9G
5	PIPE NIPPLE	1	63L2G
6	ELBOW	1	64D9G
7	PIPE BUSHING	2	64E25G
8	AIR DRYER	1	VP1026480
9	ELBOW	1	64D13G
10	HOSE	1	20500127
11	TUBE CONNECTOR	2	86H142
12	WATER MANIFOLD	1	300EHG072
13	SCREW	2	75LM51
14	NUT	2	50AW5
15	PIPE BUSHING	1	64E31G
16	SCREW	4	75LM48
17	CORD (7 METERS)	1	VP1010780

DRYER ASSEMBLY
WATER-COOLED VS70

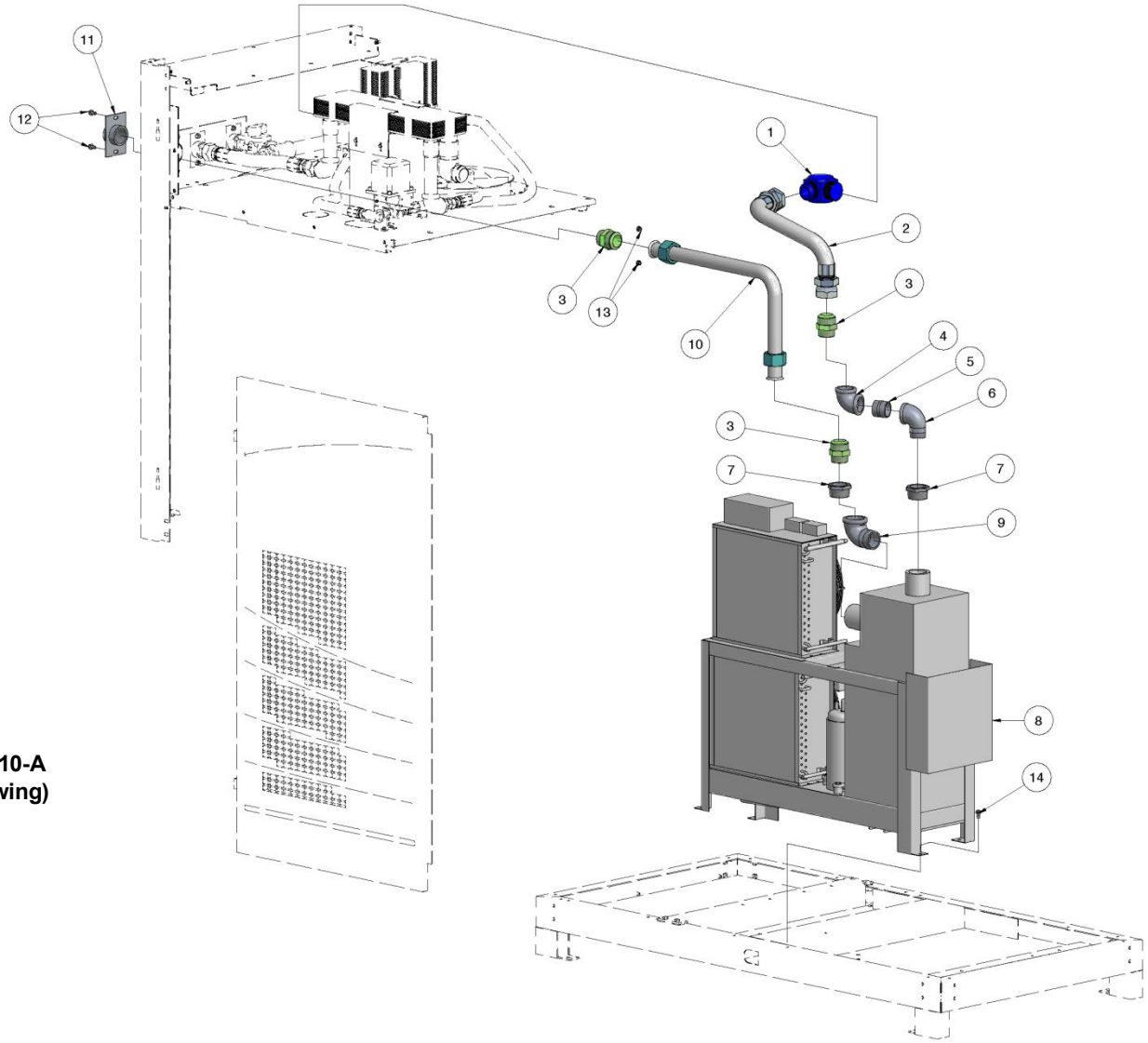

325CGD810-A
(Ref. Drawing)

Order by Part Number and Description. Reference Numbers are for your convenience only

DRYER ASSEMBLY
WATER-COOLED VS70

B/M: 317CGD4023

Ref. No.	Name of Part	Qty.	Part No.
1	ADAPTOR	1	119446
2	HOSE	1	300CGD127
3	TUBE CONNECTOR	3	86H142
4	ELBOW	1	64C9G
5	PIPE NIPPLE	1	63L2G
6	ELBOW	1	64D9G
7	PIPE BUSHING	2	64E25G
8	AIR DRYER	1	VP1026480
9	ELBOW	1	64D13G
10	HOSE	1	20500127
11	WATER MANIFOLD	1	300EHG072
12	SCREW	2	75LM51
13	NUT	2	50AW5
14	SCREW	4	75LM48
15	CORD (7 METERS)	1	VP1010780

ENCLOSURE – INTERNAL PARTS

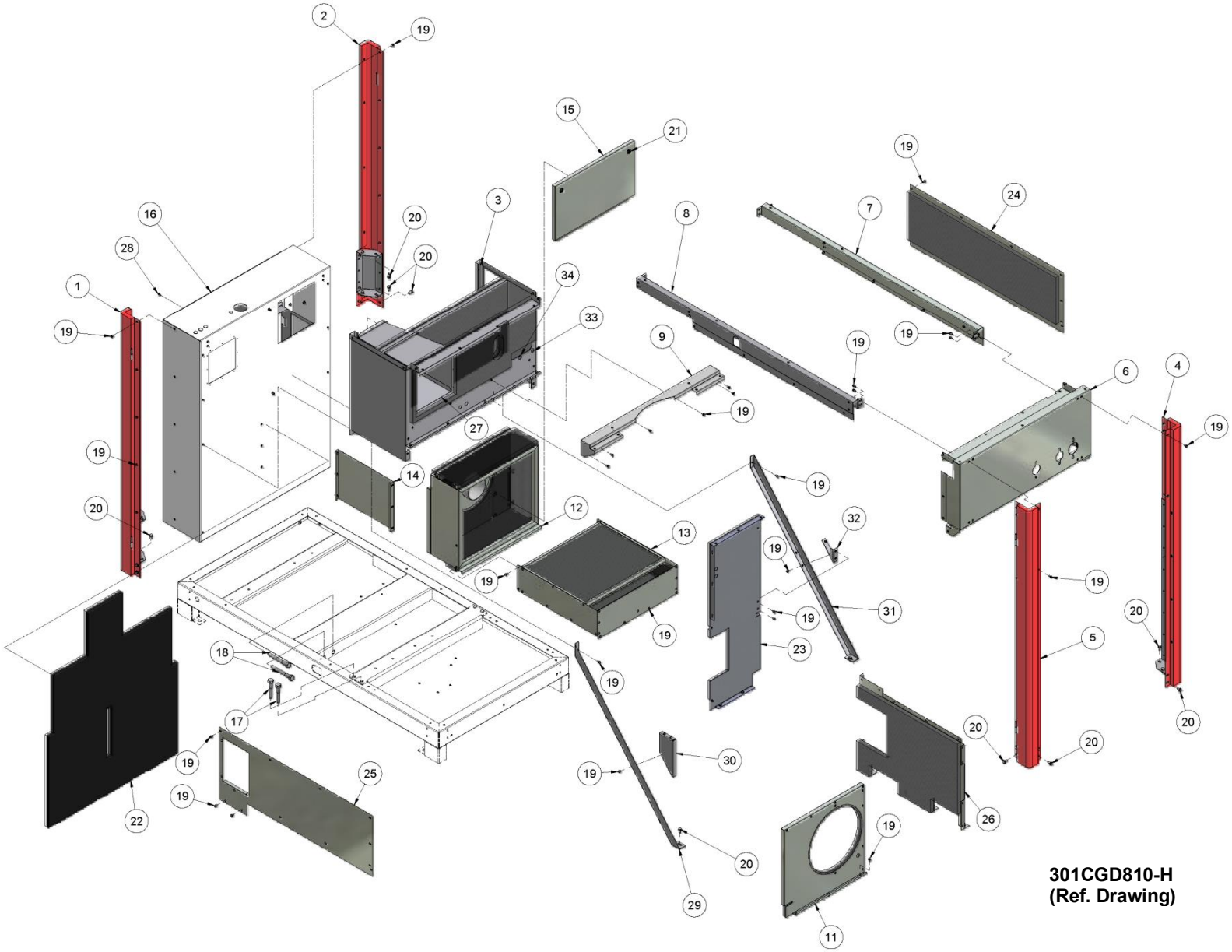

Order by Part Number and Description. Reference Numbers are for your convenience only.

ENCLOSURE – INTERNAL PARTS

Ref. No.	Name of Part	Qty.	Part No.	Ref. No.	Name of Part	Qty.	B/M: 300, 309 & 310CGD4017; 300CGD4013 Part No.
1	POST, RIGHT SIDE	1	20500110	20	SCREW	26	75LM51
2	POST, LEFT SIDE	1	20500111	21	LATCH	2	89865139
3	SUPPORT	1	20500094	22	ACOUSTIC MATERIAL	1	VP1010695
4	POST, RIGHT SIDE	1	20500081	23	PANEL	1	20500097
5	POST, LEFT SIDE	1	20500082	24	PANEL	1	20500020
6	SUPPORT	1	CC1017309	25	PANEL	1	20500021
7	SUPPORT	1	20500089	26	PANEL	1	20500096
8	SUPPORT	1	20500090	*27	BLACK GRILL	1	24CA5914
9	SUPPORT	1	CC1017310	28	SCREW	12	75LM215
11	SUPPORT	1	20500091	29	SUPPORT	1	CC1013775
12	INLET HOUSING	1	20500092	30	SUPPORT	1	CC1013776
13	AIR INLET BOX	1	20500093	31	SUPPORT		
14	SUPPORT	1	20500095		WITHOUT DRYER	1	CC1013777
15	DOOR	1	20500051		WITH DRYER	1	CC1014402
17	GUIDE BOLT	2	20500078	32	SUPPORT	1	CC1013778
18	GUIDE BOLT	2	20500077	33	ELECTRICAL FITTING	1	24CA609
19	SCREW	57	75LM47	34	ELECTRICAL FITTING	1	24CA2865

* For Replacement Filter Element Order Part Number 24CA5929

ENCLOSURE – EXTERNAL PARTS

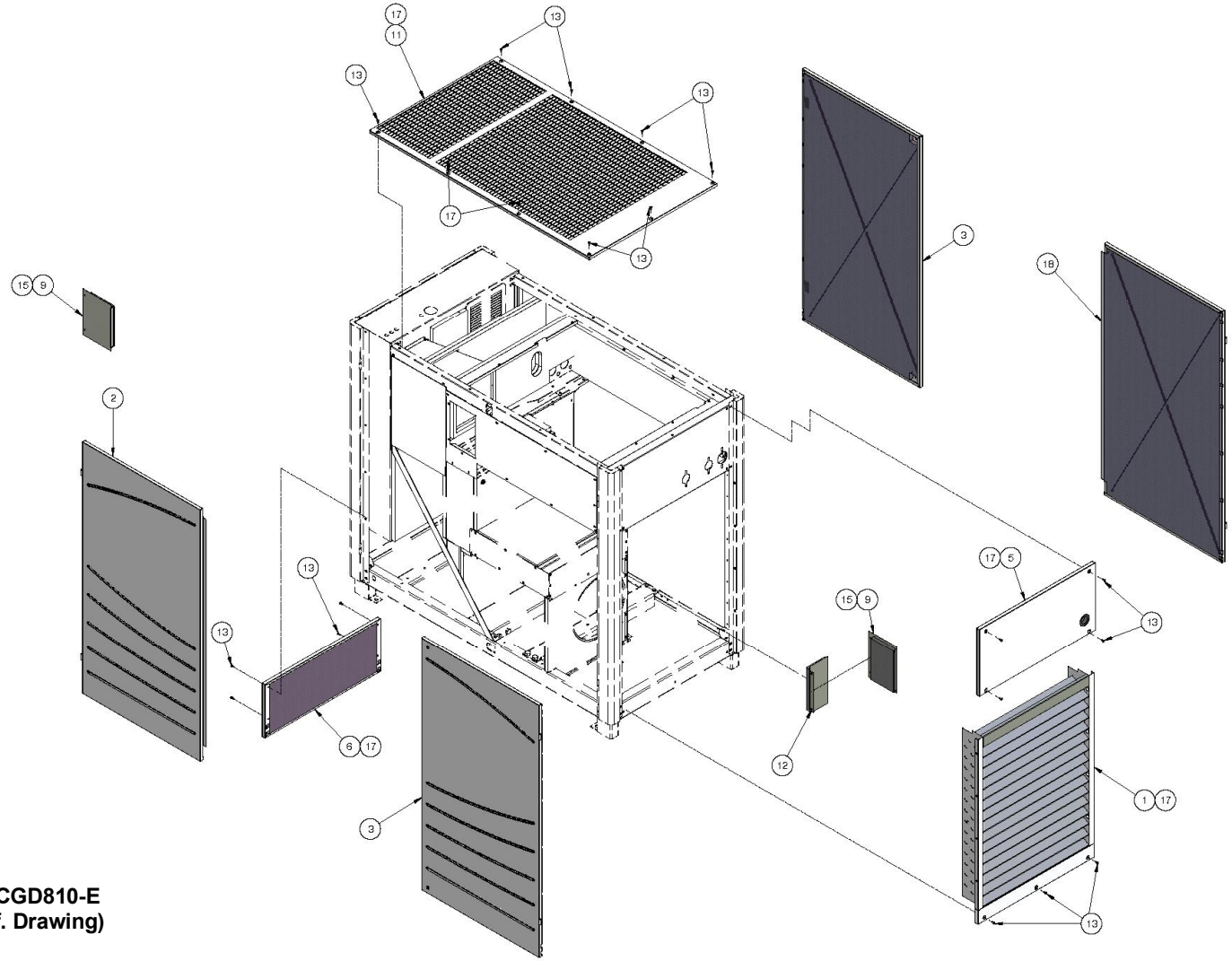

302CGD810-E
(Ref. Drawing)

Order by Part Number and Description. Reference Numbers are for your convenience only.

ENCLOSURE – EXTERNAL PARTS

Ref. No.	Name of Part	Qty.	B/M: 301CGD4017, 304, 305 & 308CGD4017; 301CGD4013 Part No.
1	GRILLE - AIR INLET	1	20500016
2	DOOR - LEFT DOOR LEFT HINGED	1	20500012
3	DOOR - RIGHT DOOR RIGHT HINGED	2	20500013
5	COVER - AIR INLET TOP COVER		
	AIR-COOLED	1	20500017
	WATER-COOLED	1	20500148
6	COVER - BELOW CONTROL BOX	1	20500018
9	DOOR - ACCESS DOOR FOR MAINTENANCE	2	20500053
11	PANEL ï CANOPY		
	AIR-COOLED	1	20500046
	WATER-COOLED	1	20500138
12	DOOR	1	20500117
13	SCREW	105	75LM47
14	LATCH	4	89865139
15	LATCH	4	31D75
17	PLUG	19	24CA5943
18	DOOR - LEFT DOOR LEFT HINGED		
	LESS DRYER	1	20500012
	WITH DRYER	1	20500103
19	KEY (not shown)	2	VP1014243

IDENTIFICATION AND INSTRUCTION GROUP

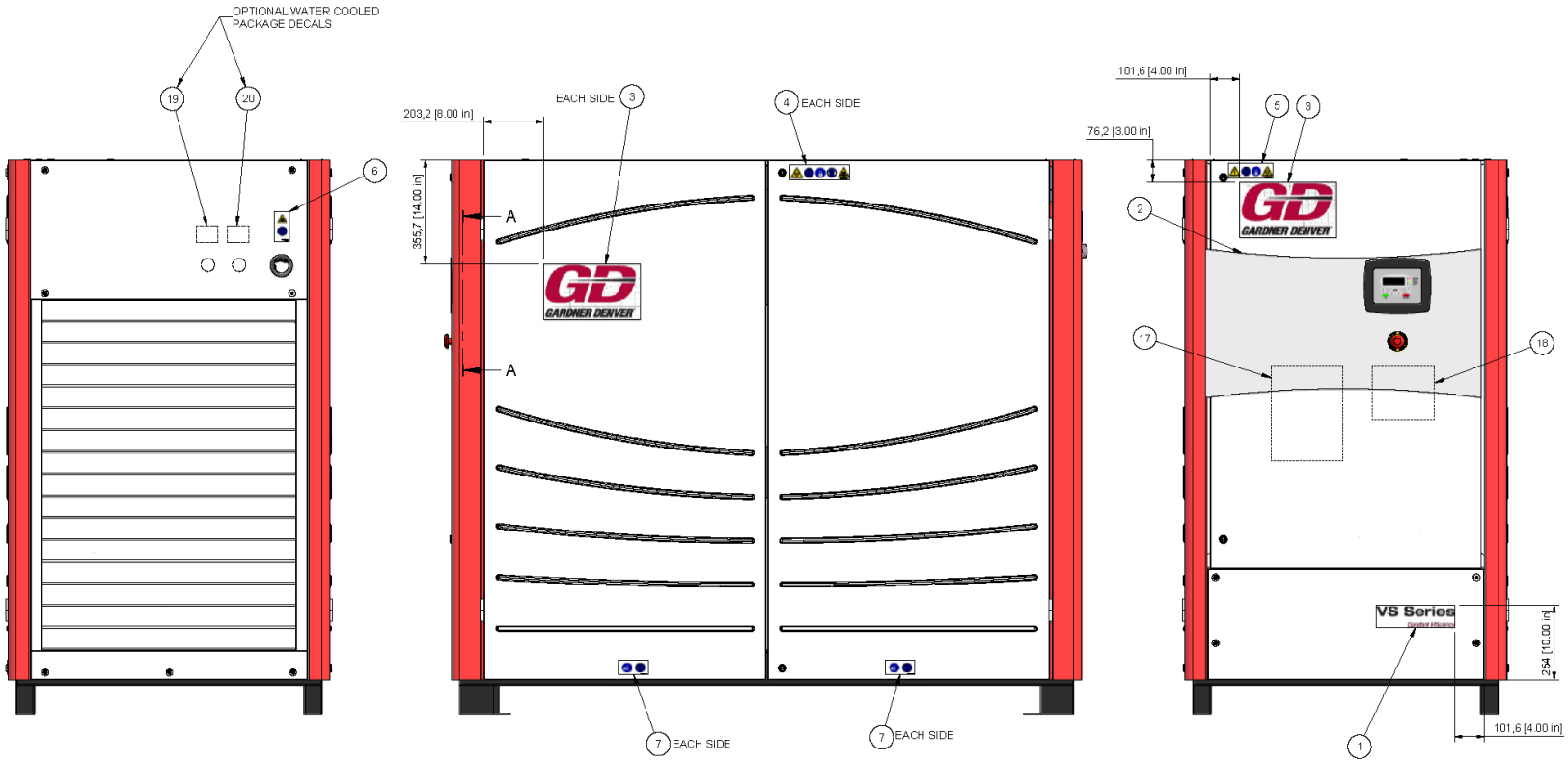

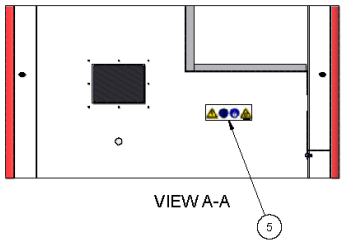

304CGD810-E
(Ref. Drawing)
Page 1 of 2

Order by Part Number and Description. Reference Numbers are for your convenience only.

IDENTIFICATION AND INSTRUCTION GROUP

Ref. No.	Name of Part	Qty.	B/M: 300CGD4011 303CGD4011 306CGD4011 Part No.
1	DECAL VS SERIES	1	VP1044841
2	GRAY CONTROL BOX DECAL	1	20500113
3	DECAL, GARDNER DENVER PACKAGE LOGO	3	VP1042952
*4	DECAL, ISO WARNING ï SIDES ABOVE DOORS	2	VP1009372
*5	DECAL, ISO WARNING ï CONTROL BOX	2	VP1009371
*6	DECAL, ISO WARNING ï PACKAGE DISCHARGE AIR	1	VP1009623
*7	DECAL, ISO WARNING ï FORK POCKET	4	VP1009373
17	POCKET	1	VP1009797
18	DECAL, GD CD MANUAL		
	ENGLISH	1	VP1009795
	FRENCH CANADIAN	1	VP1012949
	MEXICAN SPANISH	1	VP1012948
19	DATA PLATE, COOL WATER ñOUTò (WATER COOLED ONLY)	1	202EWD454
20	DATA PLATE, COOL WATER ñINò (WATER COOLED ONLY)	1	203EWD454

* For Replacement Decals Order Part Number CC1010403 Decal Group Sheet.

IDENTIFICATION AND INSTRUCTION GROUP

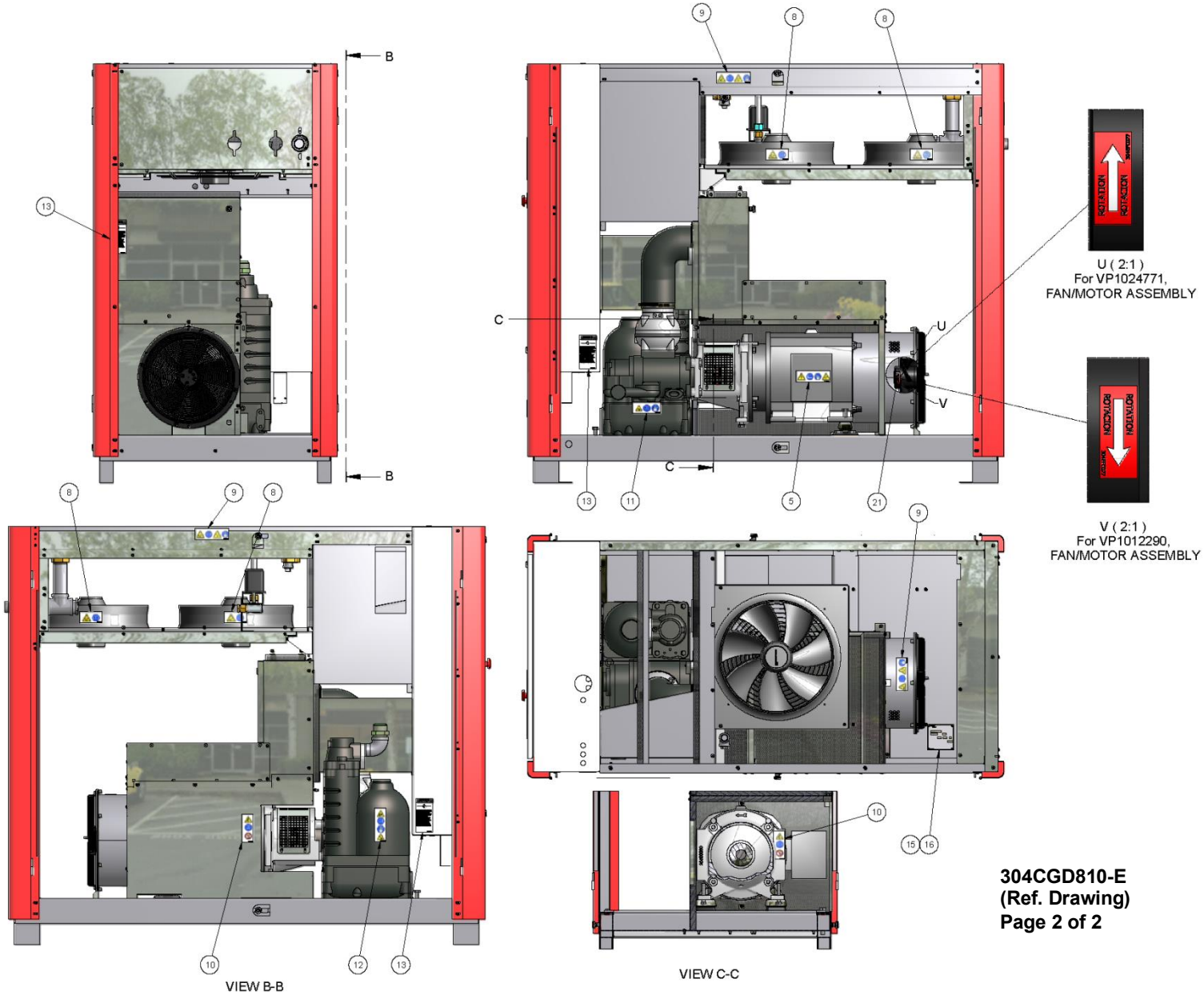

304CGD810-E
(Ref. Drawing)
Page 2 of 2

Order by Part Number and Description. Reference Numbers are for your convenience only.

IDENTIFICATION AND INSTRUCTION GROUP

B/M: 300CGD4011

Ref. No.	Name of Part	Qty.	Part No.
*5	DECAL, ISO WARNING ï CONTROL BOX	1	VP1009371
*8	DECAL, ISO WARNING ï ROTATING FANS	4	VP1009640
*9	DECAL, ISO WARNING ï FAN/COOLER HOUSING	3	VP1009582
*10	DECAL, ISO WARNING ï COUPLING HOUSING	2	VP1009375
*11	DECAL, ISO WARNING ï TEMPEST CASTING	1	VP1009583
*12	DECAL, ISO WARNING ï SEPARATOR TANK	1	VP1009376
13	DECAL, NOTICE (USE GENUINE GD PARTS)	3	CC1009474
21	DECAL, ROTATION ARROW	1	300CGD007

* For Replacement Decals Order Part Number CC1010403 Decal Group Sheet.

CONTROLLER BOX
(AIR-COOLED)

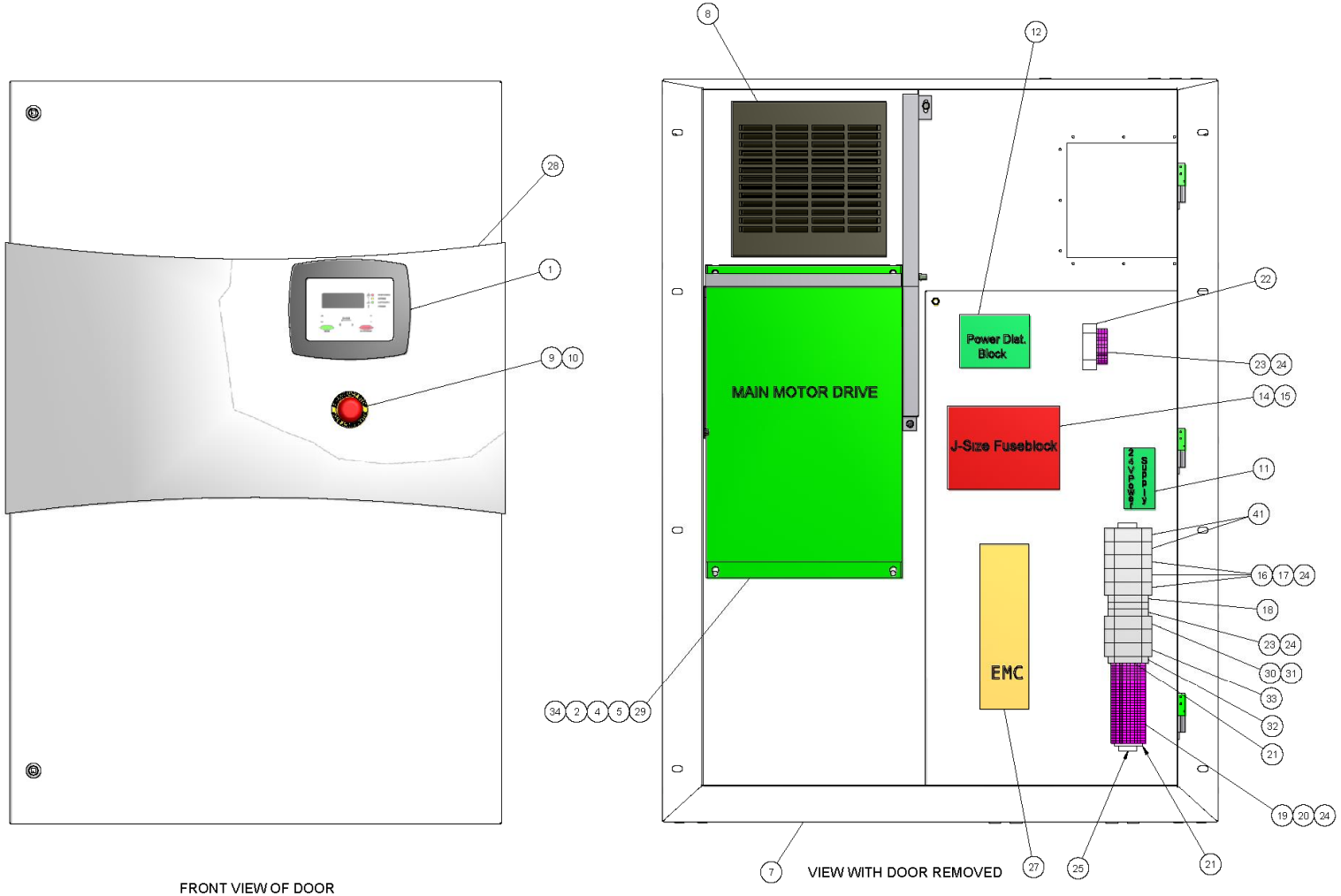

FRONT VIEW OF DOOR

VIEW WITH DOOR REMOVED

308CGD810-E
(Ref. Drawing)

NOTE:
1. DRAWING IS USED WITH MULTIPLE BILLS ITEMS MAY NOT APPEAR ON SOME BILLS
2. DETAILS 30, 31, 32, 33 & 34 ADDED WHEN PACKAGE HAS DRYER
3. DETAILS 35, 36, 37, 38 & 39 NOT SHOWN

Order by Part Number and Description. Reference Numbers are for your convenience only.

CONTROLLER BOX
(AIR-COOLED)

			Air & Water-	Air-Cooled	Air-Cooled	308CGD1189	345CGD1189
	ASSEMBLED CONTROL BOX WITHOUT EMC FILTER	1	300CGD1189	301CGD1189	302CGD1189	----------	345CGD1189
	ASSEMBLED CONTROL BOX WITH EMC FILTER	1	304CGD1189	306CGD1189	308CGD1189	308CGD1189	----------
1	AIRSMART CONTROLLER	1	89864799	89864799	89864799	89864799	
**** 2	GRP-DRIVE	1	89864389D	90500030B	90500031B	90500031B	90500031J
4	SPLITTER CABLE	1	24CA5899	24CA5899	24CA5899	24CA5899	24CA5899
5	SCREW TERMINAL PLUG	2	24CA5933	24CA5933	24CA5933	24CA5933	24CA5933
7	CONTROL BOX ENCLOSURE	1	20500006	20500006	20500006	20500006	20500006
** 8	ELECTRICAL FILTER	1	24CA5914	24CA5914	24CA5914	24CA5914	24CA5914
9	OPERATOR, E-STOP	1	24CA2907	24CA2907	24CA2907	24CA2907	24CA7622
10	CONTACT BLOCK	1	24CA2908	24CA2908	24CA2908	24CA2908	24CA6191
11	POWER SUPPLY	1	24CA6050	24CA6050	24CA6050	24CA6050	24CA7615
12	POWER DISTRIBUTION BLOCK	1	24CA5948	24CA5948	24CA5948	24CA5948	24CA5948
14	FUSE HOLDER	1	24CA5903	24CA5903	24CA5903	24CA5903	24CA5903
15	FUSE	3	24CA5902	24CA5925	24CA5926	24CA5926	24CA5926
16	FUSE BLOCK	5	24CA5910	24CA5910	24CA5910	24CA5910	24CA7198
17	FUSE	3	24CA4091	24CA4092	24CA4092	24CA4092	24CA4092
18	RELAY	1	24CA5931	24CA5931	24CA5931	24CA5931	24CA7014
19	TERMINAL BLOCK	14	24CA5984	24CA5984	24CA5984	24CA5984	24CA7608
20	TERMINAL BLOCK	1	24CA5985	24CA5985	24CA5985	24CA5985	24CA5985
21	GROUND BLOCK	2	24CA5986	24CA5986	24CA5986	24CA5986	24CA5986
22	GROUND BLOCK	1	24CA6071	24CA6071	24CA6071	24CA6071	24CA6071
23	GROUND BLOCK	3	24CA5989	24CA5989	24CA5989	24CA5989	24CA5989
24	TERMINAL BLOCK	4	24CA5987	24CA5987	24CA5987	24CA5987	24CA5987
25	DIN RAIL	1	24CA5991	24CA5991	24CA5991	24CA5991	24CA5991
* 27	EMC FILTER	1	89864669	90500048	90500049	90500049	----------
28	CONTROL BOX DECAL (not shown)	1	20500113	20500113	20500113	20500113	20500113
29	NUT	4	50AW4	50AW4	50AW4	50AW4	VP1031397
30	FUSE BLOCK	2	24CA5910	24CA5910	24CA5910	24CA5981	24CA5910
31	FUSE	2	24CA3952	24CA3952	24CA3952	24CA3952	24CA3952
32	GROUND BLOCK	1	24CA5909	24CA5909	24CA5909	24CA5909	24CA5909
33	RELAY	1	24CA5959	24CA5959	24CA5959	24CA5959	24CA5959
34	RESISTOR	1	24CA5960	24CA5960	24CA5960	24CA5960	24CA5960
35	CORD (not shown)	1	VP1010780	VP1010780	VP1010780	VP1010780	VP1010780
36	WIRE (IN FEET) (not shown)	1	97H2A	97H2A	97H2A	97H2A	97H2A
37	WIRE (IN FEET) (not shown)	2	97H2B	97H2B	97H2B	97H2B	97H2B
38	ELECTRICAL FITTING (not shown)	2	24CA615	24CA615	24CA615	24CA615	24CA615
39	ELECTRICAL FITTING (not shown)	4	24CA2865	24CA2865	24CA2865	24CA2865	24CA2865
41	FUSE	2	24CA5981	24CA5981	24CA5981	24CA5981	24CA5981

* Only used with EMC Filter Control Box
** For Replacement Filter Element Order Part Number 24CA5929
**** For VFD cooling fan replacement kit for VFD Part Number 89864389, 90500030 and 90500031, order kit Part Number 24CA7613.

NOTE: Items 30 thru 39 used when Package has Optional Integrated Dryer, Part Number 305CGD4007.
NOTE: For AirSmart Communication Module Kit, see Part Number 300ETK6028. Refer to page 62.

CONTROLLER BOX
(WATER-COOLED)

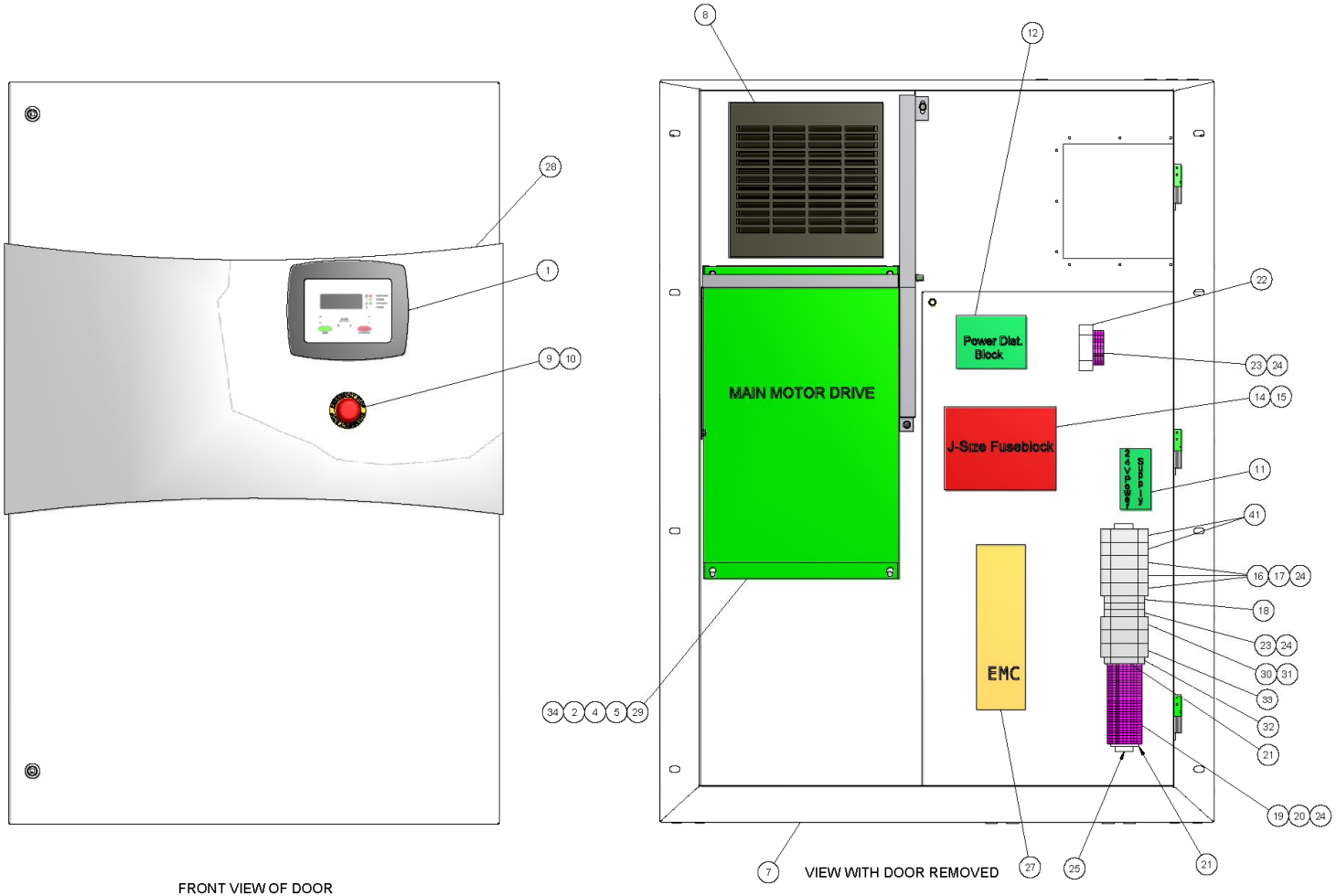

FRONT VIEW OF DOOR

VIEW WITH DOOR REMOVED

308CGD810-E
(Ref. Drawing)

NOTE:
1. DRAWING IS USED WITH MULTIPLE BILLS ITEMS MAY NOT APPEAR ON SOME BILLS
2. DETAILS 30, 31, 32, 33 & 34 ADDED WHEN PACKAGE HAS DRYER
3. DETAILS 35, 36, 37, 38 & 39 NOT SHOWN

Order by Part Number and Description. Reference Numbers are for your convenience only

CONTROLLER BOX
(WATER-COOLED)

		Qty	VS50 460V	VS70 460V
	ASSEMBLED CONTROL BOX WITH EMC FILTER		316CGD1189	317CGD1189
	ASSEMBLED CONTROL BOX WITHOUT EMC FILTER		314CGD1189	315CGD1189
1	AIRSMART CONTROLLER	1	89864799	89864799
2	GRP-DRIVE	1	90500030B	90500031B
4	SPLITTER CABLE	1	24CA5899	24CA5899
5	SCREW TERMINAL PLUG	2	24CA5933	24CA5933
7	CONTROL BOX ENCLOSURE	1	20500006	20500006
**8	ELECTRICAL FILTER	1	24CA5914	24CA5914
9	OPERATOR, E-STOP	1	24CA2907	24CA2907
10	CONTACT BLOCK	1	24CA2908	24CA2908
11	POWER SUPPLY	1	24CA6050	24CA6050
12	POWER DISTRIBUTION BLOCK	1	24CA5948	24CA5948
14	FUSE HOLDER	1	24CA5903	24CA5903
15	FUSE	3	24CA5925	24CA5926
16	FUSE BLOCK	5	24CA5910	24CA5910
17	FUSE	3	24CA4091	24CA4091
18	RELAY	1	24CA5931	24CA5931
19	TERMINAL BLOCK	14	24CA5984	24CA5984
20	TERMINAL BLOCK	1	24CA5985	24CA5985
21	GROUND BLOCK	2	24CA5986	24CA5986
22	GROUND BLOCK	1	24CA6071	24CA6071
23	GROUND BLOCK	3	24CA5989	24CA5989
24	TERMINAL BLOCK	4	24CA5987	24CA5987
25	DIN RAIL	1	24CA5991	24CA5991
* 27	EMC FILTER	1	90500048	90500049
28	CONTROL BOX DECAL (not shown	1	20500113	20500113
29	NUT	4	50AW4	50AW4
30	FUSE BLOCK	2	24CA5910	24CA5910
31	FUSE	2	24CA3952	24CA3952
32	GROUND BLOCK	1	24CA5909	24CA5909
33	RELAY	1	24CA5959	24CA5959
34	RESISTOR	1	24CA5960	24CA5960
35	CORD (not shown)	1	VP1010780	VP1010780
36	WIRE (IN FEET) (not shown)	1	97H2A	97H2A
37	WIRE (IN FEET) (not shown)	2	97H2B	97H2B
38	ELECTRICAL FITTING) (not shown)	2	24CA615	24CA615
39	ELECTRICAL FITTING) (not shown)	4	24CA2865	24CA2865
41	FUSE	2	24CA5981	24CA5981

* Only used with EMC Filter Control Box
** For Replacement Filter Element Order Part Number 24CA5929

NOTE: Items 30 thru 39 used when Package has Optional Integrated Dryer, Part Number 305CGD4007.
NOTE: For AirSmart Communication Module Kit, see Part Number 300ETK6028. Refer to page 62.

CONTROLLER BOX – 575 VOLT

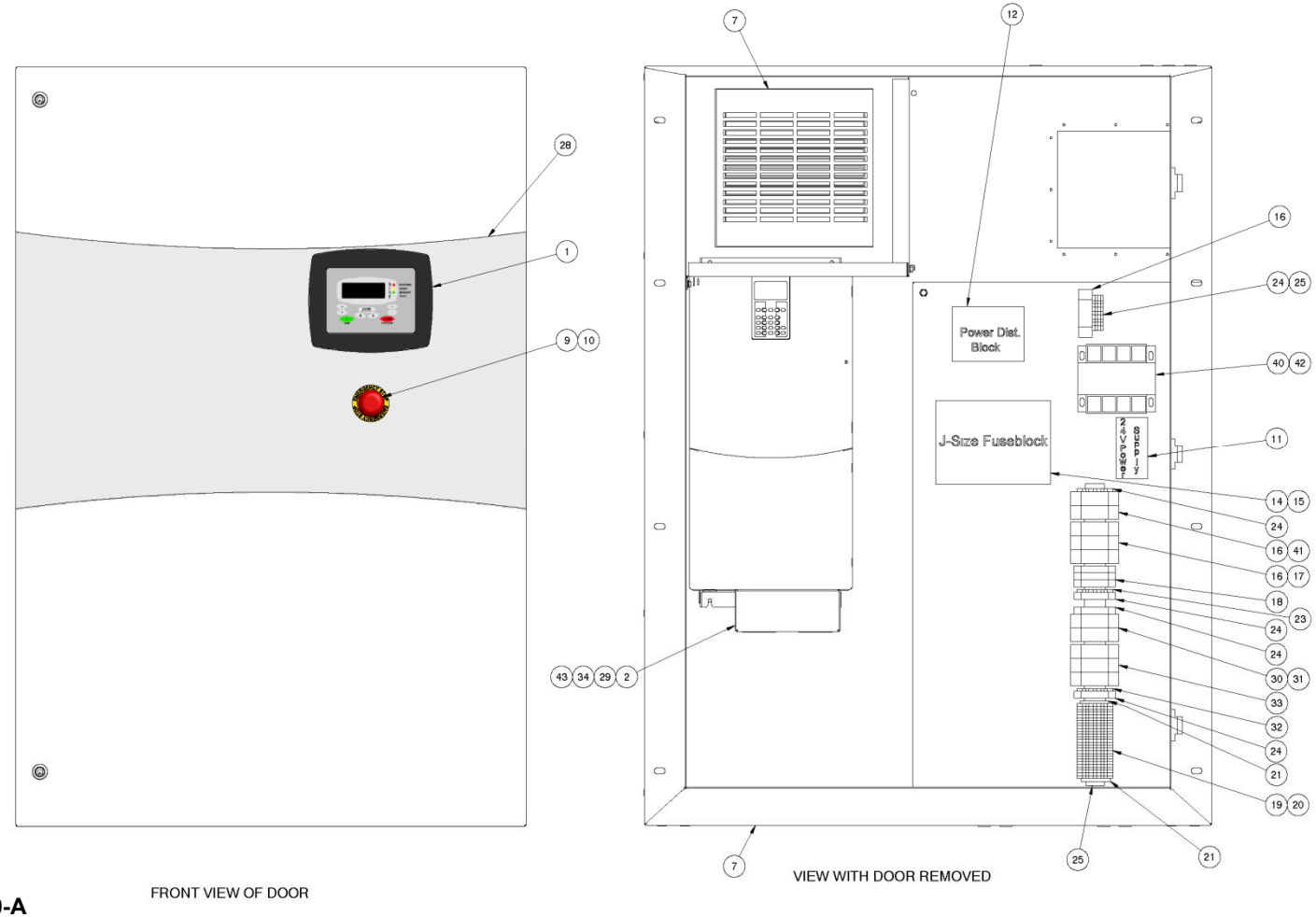

319CGD810-A
(Ref, Drawing)

Order by Part Number and Description. Reference Numbers are for your convenience only

CONTROLLER BOX – 575 VOLT

			Qty	Air-Cooled VS50	Water-Cooled VS50	Air-Cooled VS70	Water-Cooled VS70
		ASSEMBLED CONTROL BOX WITH EMC FILTER	1	313CGD1189	312CGD1189	309CGD1189	310CGD1189
	1	CONTROLLER	1	89864799	89864799	89864799	89864799
	2	Drive group	1	90500157A	90500157A	90500155A	90500155A
	7	Control Box	1	CC1021494	CC1021494	CC1021494	CC1021494
*	8	FILTER	1	24CA5914	24CA5914	24CA5914	24CA5914
	9	SWITCH	1	24CA2907	24CA2907	24CA2907	24CA2907
	10	SWITCH	1	24CA2908	24CA2908	24CA2908	24CA2908
	11	POWER UNIT	1	24CA6051	24CA6051	24CA6051	24CA6051
	12	BLOCK	1	24CA5948	24CA5948	24CA5948	24CA5948
	14	HOLDER	1	24CA5919	24CA5919	24CA5903	24CA5903
	15	FUSE	3	24CA5917	24CA5917	24CA5902	24CA5902
	16	BLOCK	5	24CA5910	24CA5910	24CA5910	24CA5910
	17	FUSE	3	24CA4092	24CA4091	24CA4092	24CA4091
	18	RELAY	1	24CA5931	24CA5931	24CA5931	24CA5931
	19	BLOCK	14	24CA5984	24CA5984	24CA5984	24CA5984
	20	BLOCK	1	24CA5985	24CA5985	24CA5985	24CA5985
	21	BLOCK	2	24CA5986	24CA5986	24CA5986	24CA5986
	22	BLOCK	1	24CA6071	24CA6071	24CA6071	24CA6071
	23	BLOCK	3	24CA5989	24CA5989	24CA5989	24CA5989
	24	BLOCK	4	24CA5987	24CA5987	24CA5987	24CA5987
	25	BLOCK	1	24CA5991	24CA5991	24CA5991	24CA5991
	28	DECAL	1	20500113	20500113	20500113	20500113
	29	NUT	4	50AW4	50AW4	50AW4	50AW4
	30	FUSE BLOCK	2	24CA5910	24CA5910	24CA5910	24CA5910
	31	FUSE	2	24CA3952	24CA3952	24CA3952	24CA3952
	32	GROUND BLOCK	1	24CA5909	24CA5909	24CA5909	24CA5909
	33	RELAY	1	24CA5959	24CA5959	24CA5959	24CA5959
	34	RESISTOR	1	24CA5960	24CA5960	24CA5960	24CA5960
	35	CORD (not shown)	1	VP1010780	VP1010780	VP1010780	VP1010780
	36	WIRE (IN FEET) (not shown)	1	97H2A	97H2A	97H2A	97H2A
	37	WIRE (IN FEET) (not shown)	2	97H2B	97H2B	97H2B	97H2B
	38	ELECTRICAL FITTING) (not shown)	2	24CA615	24CA615	24CA615	24CA615
	39	ELECTRICAL FITTING) (not shown)	4	24CA2865	24CA2865	24CA2865	24CA2865
	40	TRANSFORMER	1	VP1024577	VP1024577	VP1024577	VP1024577
	41	FUSE	2	24CA3719	24CA3719	24CA3719	24CA3719
	42	FUSE	1	24CA2779	24CA2779	24CA2779	24CA2779
	43	COMMUNICATION MODULE	1	90500154	90500154	90500154	90500154

* For Replacement Filter Element Order Part Number 24CA5929

NOTE: Items 30 thru 39 used when Package has Optional Integrated Dryer, Part Number 305CGD4007.
NOTE: For AirSmart Communication Module Kit, see Part Number 300ETK6028. Refer to page 62.

MISCELLANEOUS ELECTRICAL PARTS

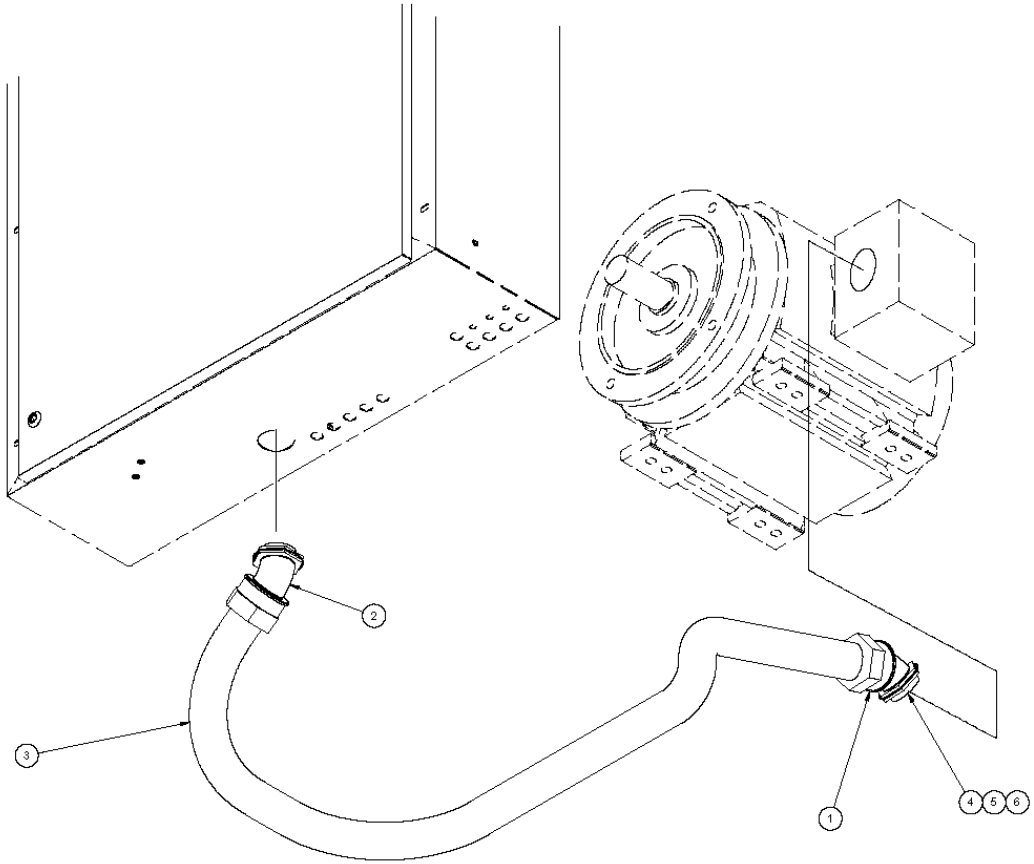

310CGD810-B
(Ref, Drawing)

Order by Part Number and Description. Reference Numbers are for your convenience only.

MISCELLANEOUS ELECTRICAL PARTS

Ref. No.	Name of Part	Qty.	VS50 460V B/M: 304CGD4007 Part No.	VS50 575V B/M: 307CGD4007 Part No.	VS70 460V B/M: 300CGD4007 Part No.	VS70 575V B/M: 308CGD4007 Part No.
1	CONDUIT FITTING.....	1	2009334	2009334	2009338	2009338
2	CONDUIT FITTING.....	1	2009334	2009334	2009338	2009338
3	CONDUIT (IN FEET).....	8	2009315	2009315	2009412	2009412
4	WIRE (IN FEET)	50	2009422	2009422	2009802	2009410
5	WIRE (IN FEET)	20	97J76	97J76	97J77	97J76
6	TERMINAL LUG	3	24CA203	24A500	24CA205	24A499

Ref. No.	Name of Part	Qty.	VS45 460V B/M: 303CGD4007 Part No.
1	CONDUIT FITTING.....	1	2009334
2	CONDUIT FITTING.....	1	2009334
3	CONDUIT (IN FEET).....	8	2009315
4	MOTOR LEAD ASSEMBLY.....	1	306CGD4007
5	WIRE (IN FEET).....	20	97J65
6	TERMINAL LUG	3	24CA202

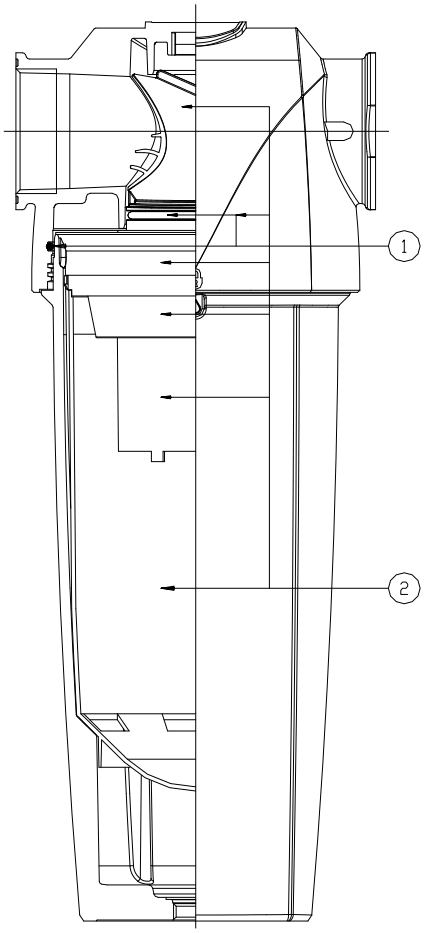

MOISTURE SEPARATOR WITH TRAP
(VP1021702)

(VS45)

Ref. No.	Name of Part	Qty.	Part No.
	SEPARATOR (LESS TRAP)	1	2118544
1	O-RING	1	2118584
2	INTERNAL KIT	1	2118588
*	TRAP (EXTERNAL).....	1	VP1010053
*	ISOLATION VALVE.....	1	2118388

* Not shown

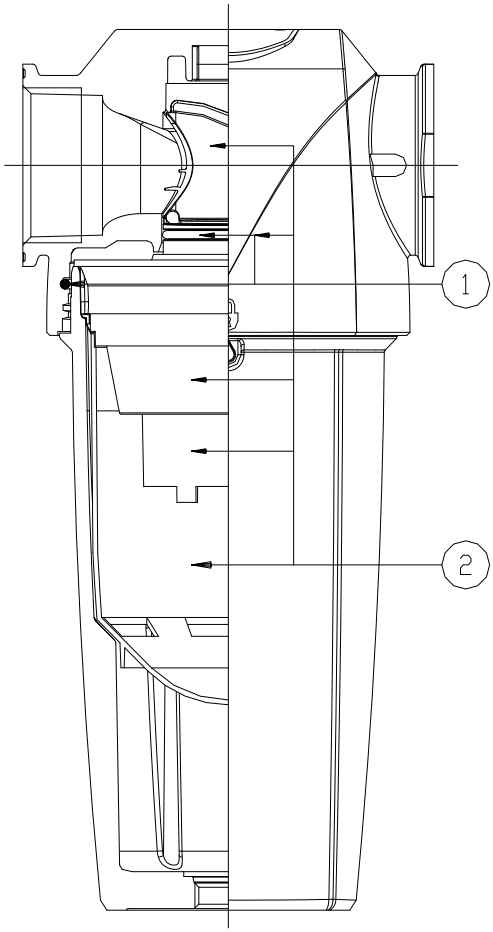

MOISTURE SEPARATOR WITH TRAP
(VP1021703)

(VS50 & VS70)

Ref. No.	Name of Part	Qty.	Part No.
	SEPARATOR (LESS TRAP)	1	2118545
1	O-RING	1	2118585
2	INTERNAL KIT	1	2118589
*	TRAP (EXTERNAL).....	1	VP1010053
*	ISOLATION VALVE.....	1	2118388

* Not shown

REPAIR KITS

Your Gardner Denver rotary screw compressor is designed and manufactured for many years of reliable operation. All components are engineered to exacting specifications, which will function together as a system to provide maximum efficiency. To insure the continuing integrity of compressor operation, use only original quality genuine Gardner Denver replacement parts and accessories.

Name of Part	Qty.	Part No.
ROUTINE MAINTENANCE KIT (Heavy Duty Air Filter)		300CGD6013
ELEMENT, AIR FILTER	2	VP1008518
ELEMENT, OIL FILTER	3	89755919
OIL SEPARATOR KIT		307CGD6013
OIL COALESCING ELEMENT	2	VP1038827
O-RING	1	89730509
LUBRICANT	1	2116755
INLET VALVE SEAL KIT		TEN000665
O-RING	1	VP1011292
GASKET	1	VP1011293
O-RING	1	VP1011294
O-RING	4	VP1011295
O-RING	1	VP1011296
O-RING	1	VP1011297
WASHER	1	VP1011246
O-RING	1	VP1011251
O-RING	1	VP1011250
GASKET	1	TEN000658
LOCK RING	1	VP1011252
INLET VALVE REPAIR KIT		TEN000666
POPPET	1	VP1011291
O-RING	1	VP1011292
GASKET	1	VP1011293
O-RING	1	VP1011294
O-RING	4	VP1011295
O-RING	1	VP1011296
O-RING	1	VP1011297
WASHER	1	VP1011246
O-RING	1	VP1011251
O-RING	1	VP1011250
GASKET	1	TEN000658
LOCK RING	1	VP1011252
PERIODIC MAINTENANCE KIT (Minimum Pressure Valve)		302EGE6013
MINIMUM PRESSURE VALVE SEAL KIT	1	89783319
O-RING	1	89730509
PNEUMATIC CONTROLS AND GAUGES		308CGD6013
CHECK VALVE	1	CC1040088
REGULATOR	1	88H367
GAUGE	1	2118767

REPAIR KITS (CONTINUED)

Name of Part	Qty.	Part No.
ELECTRICAL CONTROL KIT		301CGD6013
TRANSDUCER	2	VP1011577
THERMISTOR PROBE	1	VP1018671
THERMISTOR PROBE	1	VP1020738
SOLENOID VALVE	1	91B234
SOLENOID VALVE	1	91B235
VACUUM SWITCH	1	88H195
ELECTRICAL PROBE (8 FT CORD)	1	VP1018675
ELECTRICAL PROBE (30 FT CORD)	1	VP1018672
CORD	2	VP1010781
DRIVE SHAFT SEAL KIT		300CGD6029
OIL SEAL	1	89556219
INNER RING	1	89533519
GASKET	1	30809118
DUST SEAL	1	VP1016844
COMPOUND ANTI-SEIZE	1	25BC850
GASKET ELIMINATOR	1	25BC632
SHAFT SEAL KIT	1	301CGD6029
COUPLING INSTALLATION SHEET	1	MP167
BEARING KIT E25+		305CGD6013
ROLLER BEARING	1	12BA226
ROLLER BEARING	1	12BA227
ROLLER BEARING	2	87284739
BALL BEARING	1	12BA230
BALL BEARING	1	87457139
NUT	1	86912899
NUT	1	87455529
GASKET KIT		306CGD6013
GASKET	1	22324258
O-RING	2	87908849
O-RING	1	87284609
PIN	2	62M178
SHAFT SEAL KIT	1	300CGD6029
BARE AIREND REPAIR KIT		304GCD6013
AIREND E25+	1	50584054
O-RING	1	89565109
O-RING	1	89730359
LUBRICANT (AEON 9000SP) - STANDARD		
5-GALLON PAIL	1	28H109
55-GALLON DRUM	1	28H110
LUBRICANT (AEON 9000TH)		
5-GALLON PAIL	1	28H286
55-GALLON DRUM	1	28H270

REPAIR KITS (CONTINUED)

Name of Part	Qty.	Part No.
LUBRICANT (AEON 6000FG)		
5-GALLON PAIL	1	28H39
55-GALLON DRUM	1	28H35
TOUCH-UP PAINT		
5-GALLON PAIL (WHITE)	1	28H76
1-GALLON CAN (WHITE)	1	28H84
1-QUART CAN (WHITE)	1	28H83
5-GALLON PAIL (RED)	1	28H325
1-GALLON CAN (RED)	1	28H324
1-QUART CAN (RED)	1	28H323
DRYER CONVERSION KIT (AIR-CLD VS50 ï 70)		300CGD6005
ELECTRICAL GROUP	1	305CGD4007
DOOR	1	20500103
HOSE ASSEMBLY	1	300CGD127
ADAPTOR	1	119446
ELBOW	1	64C9G
NIPPLE	1	63L2G
ELBOW	1	64D9G
TUBE CONNECTOR	3	86H142
AIR DRYER (VS45, 50 & 70)	1	VP1026480
PIPE BUSHING	2	64E25G
TUBE WITH FITTING	1	20500127
COOLER SUPPORT (VS45 WITH DRYER)	1	CC1017308
SUPPORT	1	CC1014402
SCREW	4	75LM48
ELBOW	1	64D13G
DRYER CONVERSION KIT (AIR-CLD VS45)		301CGD6005
ELECTRICAL GROUP	1	305CGD4007
DOOR	1	205100103
HOSE ASSEMBLY	1	VP1024006
ADAPTOR	1	119444
ELBOW	1	64D13G
PIPE BUSHING	1	64E25G
TUBE CONNECTOR	2	86H142
AIR DRYER (VS45, 50 & 70)	1	VP1026480
TUBE CONNECTOR	1	86H208
TUBE WITH FITTING	1	20500127
COOLER SUPPORT (VS50 & 70 WITH DRYER)	1	CC1017306
SUPPORT	1	CC1014402
PIPE BUSHING	1	64E48G
SCREW	4	75LM48

REPAIR KITS (CONTINUED)

Name of Part	Qty.	Part No.
DRYER CONVERSION KIT (WATER-CLD VS50-70)		302CGD6005
ELECTRICAL GROUP	1	305CGD4007
DOOR	1	20500103
HOSE ASSEMBLY	1	300CGD127
ADAPTOR	1	119446
ELBOW	1	64C9G
NIPPLE	1	63L2G
ELBOW	1	64D9G
TUBE CONNECTOR	3	86H142
AIR DRYER (VS45, 50 & 70)	1	VP1026480
PIPE BUSHING	2	64E25G
TUBE WITH FITTING	1	20500127
COOLER SUPPORT (VS45 WITH DRYER)	1	CC1014402
DOOR	1	20500103
SCREW	4	75LM48
ELBOW	1	64D13G
DRYER CONVERSION KIT (WATER-CLD VS45)		303CGD6005
ELECTRICAL GROUP	1	305CGD4007
DOOR	1	205100103
HOSE ASSEMBLY	1	301CGD127
TUBE CONNECTOR	1	86H140
TUBE CONNECTOR	1	86H208
ELBOW	1	64C9G
TUBE CONNECTOR	2	86H142
AIR DRYER	1	VP1026480
ELBOW	1	64D13G
TUBE WITH FITTING	1	20500127
SUPPORT	1	CC1014402
PIPE BUSHING	2	64E25G
SCREW	4	75LM48
NIPPLE	1	63L2G
ELBOW	1	64D9G
PIPE BUSHING	1	64E31G
COUPLING INSTALLATION & REMOVAL TOOL KIT		300CGD6031
TOOL	1	CC1021460
PULLER	1	90500151
COUPLING INSTALLATION SHEET	1	MP167
PACKAGE TOOL KIT		301CGD6031
WEAR SLEEVE PULLER	1	89587189
SHAFT SEAL TOOL	1	30851748
SHAFT SEAL TOOL	1	30851878
SHAFT SEAL TOOL	1	03423678
DISCHARGE FLANGE VALVE TOOL	1	30990908
PULLER	1	90500151
TOOL	1	CC1021460
COUPLING INSTALLATION SHEET	1	MP167
AIRSMART COMMUNICATION MODULE KIT	1	300ETK6028

Name of Part	Qty.	Part No.
CONVERSION KIT		**306CGD6031**
HOSE	1	315CGD127
HOSE	1	316CGD127
CLAMP	1	897733819
O-RING		2009697

TEN YEAR WARRANTY KIT

10 YEAR WARRANTY KIT		**308CGD6032**
OIL FILTER	1	89755919
AIR FILTER	2	VP1008518
SPARE PARTS KIT	1	307CGD6013
BOTTLE, AEON OIL SAMPLE KIT	2	VP1074048
ELECTRICAL, FAN/FILTERS SPACK	1	24CA5929

For additional information, contact your local representative or visit:
www.contactgd.com/compressors

©2016 Gardner Denver, Inc. Printed in U.S.A.

Member

Please recycle after use.